# CONSTRUCTION PLANS

FOR

# JOINING JORDAN - PROJECT #MSC 218022-CPF

## CITY OF EAST JORDAN, CHARLEVOIX COUNTY, MICHIGAN

## MEDC/CDBG PROJECT

**VICINITY MAP**
SCALE

## OWNER

CITY OF EAST JORDAN
201 MAIN ST.
EAST JORDAN, MI 49727
TOM CANNON, CITY ADMINISTRATOR
CONTACT: 231-536-3381

## LANDSCAPE ARCHITECT / ENGINEER

GOSLING CZUBAK ENGINEERING SCIENCES, INC.
1280 BUSINESS PARK DRIVE
TRAVERSE CITY, MICHIGAN, 49686-8607
231.946.9191 - 800.968.1062
www.goslingczubak.com info@goslingczubak.com

## STRUCTURAL ENGINEER

TRISON ENGINEERING GROUP, INC.
112 W. FOURTEENTH ST.
TRAVERSE CITY, MICHIGAN, 49684
231.932.9177
www.trisonengineering.com

## UTILITY CONTACTS

| NAME OF OWNER | TYPE OF UTILITY |
|---|---|
| DTE ENERGY<br>Mr. Matthew Logan<br>1250 Michcon Lane, SW<br>P.O. Box 279<br>Kalkaska, MI 49646<br>231.492.7479 | GAS |
| CONSUMER'S ENERGY<br>Ms. Megan Cogswell<br>1125 W. Green St.<br>Hastings, MI 49058<br>269-948-3503 | ELECTRIC |
| CHARTER COMMUNICATIONS<br>Mr. Steve Thinel<br>408 W. 4th St.<br>Gaylord, MI 49735<br>231.932.8117 | CABLE TV |
| AT&T<br>Mr. Ron Ouellette<br>1151 US 31 N<br>Petoskey, MI 49770<br>231.349.8013 | TELEPHONE |
| CITY OF EAST JORDAN<br>Mr. Troy Thomas<br>201 E. Main St.<br>East Jordan, Mi 49727<br>231.536.3381 | SEWER & WATER |

## PERMITS

EGLE/USACE JOINT PERMIT
PERMIT SUBMISSION # HNS-GDHJ-QKV50
STATUS: ISSUED

MDOT PERMIT: SUBMISSION # 67158
STATUS: ISSUED

CHARLEVOIX CO. SOIL EROSION AND SEDIMENT CONTROL
PERMIT # T.B.D.
STATUS: APPLICATION YET TO BE SUBMITTED

CHARLEVOIX CO. BUILDING PERMIT
PERMIT # T.B.D.
STATUS: APPLICATION YET TO BE SUBMITTED

811 Know what's below. Call before you dig.

THE LOCATION OF THE EXISTING UTILITIES, AS SHOWN ON THIS PLAN, ARE APPROXIMATE ONLY. IT SHALL BE THE RESPONSIBILITY OF THE CONTRACTOR TO VERIFY ACTUAL LOCATION AND DEPTH OF ALL EXISTING UTILITIES. THE OWNER AND THE SURVEYOR SHALL NOT BE RESPONSIBLE FOR ANY OMISSION OR VARIATION FROM THE LOCATION SHOWN. THE CONTRACTOR SHALL NOTIFY "MISS DIG" AT 1 (800) 482-7171 OR 811 THREE (3) WORKING DAYS PRIOR TO THE START OF CONSTRUCTION.

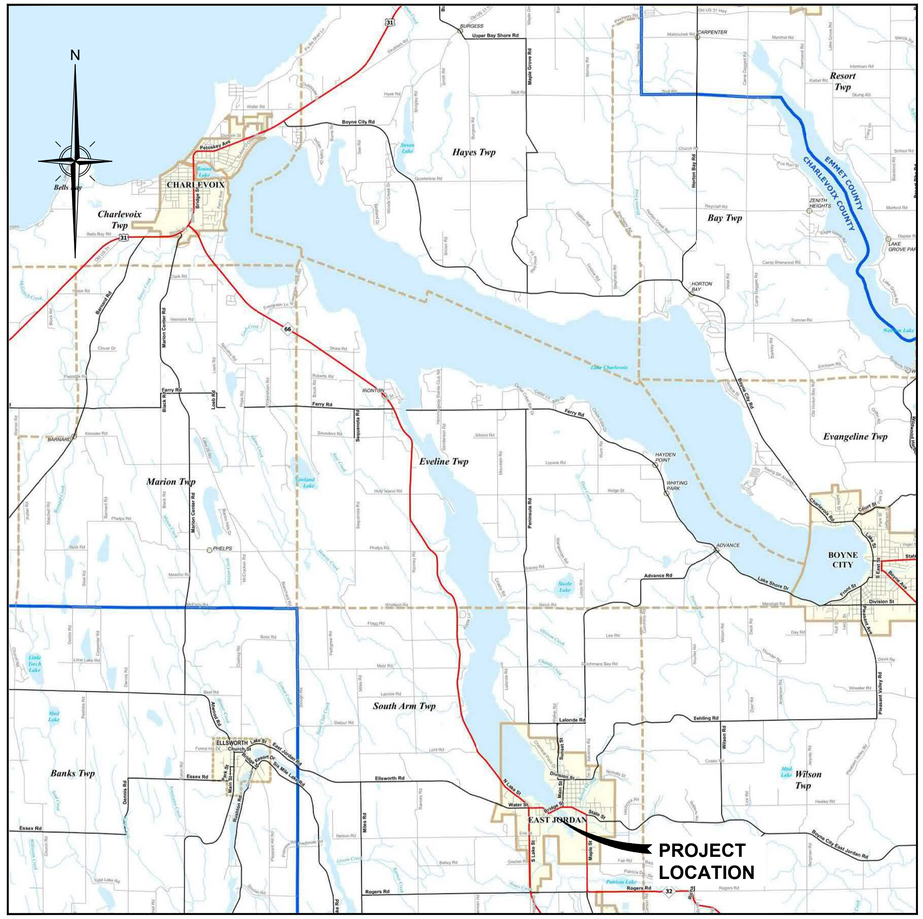


**LOCATION MAP**
NOT TO SCALE

## SHEET INDEX


| | |
|---|---|
| -- | COVER |
| R1 | GENERAL NOTES |
| R2 | OVERALL SITE PLAN |
| D1 | EXISTING CONDITIONS & DEMO PLAN 01 |
| D2 | EXISTING CONDITIONS & DEMO PLAN 02 |
| D3 | EXISTING CONDITIONS & DEMO PLAN 03 |
| D4 | EXISTING CONDITIONS & DEMO ENLARGEMENT |
| D5 | EXISTING CONDITIONS & DEMO ENLARGEMENT |
| D6 | SESC PLAN |
| C1 | LAYOUT PLAN - AREA 01 |
| C2 | LAYOUT PLAN - AREA 02 |
| C3 | LAYOUT PLAN - AREA 03 |
| C4 | ENLARGEMENT LAYOUT - AREA 01 |
| C5 | ENLARGEMENT LAYOUT - AREA 02 |
| C6 | PAVILION & WEIR PLATFORM DETAILS |
| C7 | PAVILION LAYOUT |
| C8 | ENLARGEMENT LAYOUT - AREA 03 |
| C9 | ENLARGEMENT LAYOUT - AREA 04 |
| C10 | BOARDWALK LAYOUT PLAN |
| C11 | BOARDWALK AND RAILING DETAILS 1 |
| C12 | CONSTRUCTION DETAILS |
| C13 | CONSTRUCTION DETAILS |
| C14 | CONSTRUCTION DETAILS - MDOT DETAILS |
| G1 | GRADING PLAN - AREA 01 |
| G2 | GRADING PLAN - AREA 02 |
| G3 | GRADING PLAN - AREA 03 |
| E1 | ELECTRICAL PLAN - AREA 01 |
| E2 | ELECTRICAL PLAN - AREA 02 |
| E3 | ELECTRICAL PLAN - AREA 03 |
| E4 | ELECTRICAL DETAILS AND TABLES 1 |
| E5 | ELECTRICAL DETAILS AND TABLES |
| L1 | LANDSCAPE & IRRIGATION PLAN - AREA 01 |
| L2 | LANDSCAPE & IRRIGATION PLAN - AREA 02 |
| L3 | LANDSCAPE & IRRIGATION PLAN - AREA 03 |
| T1 | SIGNAGE AND PAVEMENT MARKING PLAN |
| T2 | TRAFFIC CONTROL PHASE 01 |
| T3 | TRAFFIC CONTROL PHASE 02 |
| T4 | TRAFFIC CONTROL PHASE 03 |


12/23/2019 BID SET; 01/14/2020 ADDENDUM #001

ORIGINAL SHEET SIZE IS 22x34 - HALF SCALE SHEET IS 11x17


CIVIL ENGINEERING
SURVEYING
ENVIRONMENTAL SERVICES
GEOTECHNICAL
CONSTRUCTION SERVICES
DRILLING
LANDSCAPE ARCHITECTURE

Gosling Czubak
engineering sciences, inc.
1280 Business Park Drive, Traverse City, Michigan
231.946.9191, 800-968-1062
www.goslingczubak.com info@goslingczubak.com


JOINING JORDAN - PROJECT #MSC 218022-CPF

Issue Date
12/23/2019

Project No.
2019510004.03

Sheet
COVER

P:\2019\10004.03\cad\dwg\C3D\2019\10004-PS-Cover.dwg, Tab: COVER, Saved by: dawnz 1/13/2020 11:43 PM, Plotted by: Dallas A. Wirtz, PLA, PLS, A 1/13/2020 11:43 PM

## Removals Notes

1. REMOVE ALL TREES AS INDICATED ON PLANS. INCLUDING CUTTING STUMP AND GRINDING 12" MIN BELOW FINISHED GRADE AS INDICATED ON PLANS.
2. PROTECT ALL TREES AND SHRUBS NOT SCHEDULED FOR REMOVAL AS INDICATED ON PLANS. DO NOT OPERATE EQUIPMENT, STORE, STOCKPILE, OR PARK WITHIN DRIPLINE (DIAMETER OF CANOPY) OF TREES TO MINIMIZE SOIL COMPACTION AND PROTECT ROOT ZONE OF TREE. PROVIDE SILT FENCE BARRIER AROUND DRIP LINE OF TREE WHERE INDICATED ON PLANS. HOLD NECESSARY DISTURBANCE TO A MINIMUM.
3. CONTRACTOR TO PROVIDE FINAL LOCATION OF STOCKPILE, MATERIAL AND MACHINERY STAGING AREAS AND GET APPROVAL FROM LANDSCAPE ARCHITECT AND OWNER PRIOR TO COMMENCING WORK ON-SITE. CONTRACTOR WILL ENSURE ADEQUATE EROSION CONTROL MEASURES NOT LIMITED TO SILT FENCE INSTALLATION.
4. DO NOT OPERATE HEAVY MACHINERY BELOW SHORELINE UNLESS APPROVED BY THE PROFESSIONAL
5. THE CONTRACTOR WILL BE HELD RESPONSIBLE FOR DAMAGE TO ITEMS NOT SCHEDULED FOR REMOVAL.
6. TOP SOIL AND RESEED ALL AREAS DISTURBED BY CONSTRUCTION ACTIVITIES. REFER TO PLANS FOR SITE RESTORATION REQUIREMENTS.
7. REMOVAL ITEMS SHOWN ARE BASED ON BEST AVAILABLE INFORMATION AND ARE SHOWN SCHEMATICALLY. THE CONTRACTOR SHALL WALK THE SITE PRIOR TO BID TO BECOME FAMILIAR WITH THE EXTENT OF REMOVAL ITEMS. THE CONTRACTOR IS RESPONSIBLE FOR ALL REMOVALS NECESSARY TO COMPLETE CONSTRUCTION. QUESTIONS REGARDING ITEMS TO BE REMOVED SHALL BE DIRECTED TO THE LANDSCAPE ARCHITECT.
8. PRIOR TO CONSTRUCTION, REMOVE AND SALVAGE ALL ITEMS AS INDICATED ON PLANS.
9. STRIP AND STOCKPILE TOPSOIL IN A LOCATION APPROVED BY THE ENGINEER AND PROVIDE ALL NECESSARY S.E.S.C. MEASURES TO ELIMINATE EROSION. DO NOT STRIP TOPSOIL FROM AREAS TO BE RESTORED WITH NATIVE SEED EXCEPT IF DISTURBED BY EARTHWORK OR FOR NEW RETENTION AREAS AS INDICATED ON THE PLANS.
10. COORDINATE ELECTRICAL SERVICE, DISTRIBUTION, REMOVALS WITH LOCAL UTILITY COMPANY.
11. ALL OTHER ITEMS NEEDING TO BE REMOVED FOR NEW CONSTRUCTION, AND NOT SPECIFICALLY CALLED FOR REMOVAL ON PLAN, SHALL BE CONSIDERED INCIDENTAL TO THE WORK AND SHALL BE REMOVED AT CONTRACTORS EXPENSE.

## Layout Notes

1. ALL SIGNS AND SIGN PLACEMENT, WHERE APPLICABLE, WILL BE IN COMPLIANCE WITH THE MICHIGAN MANUAL OF UNIFIED TRAFFIC CONTROL DEVICES.
2. THE CONTRACTOR WILL SUPPLY THE NECESSARY SIGNS, SIGNALS, LIGHTING DEVICES, MARKINGS, BARRICADES, CHANNELING, AND HAND SIGNAL DEVICES TO PROPERLY SIGN THE JOB PERMITTED. THE CONTRACTOR WILL PROVIDE DESIGN, APPLICATION, INSTALLATION, AND MAINTENANCE OF VARIOUS TRAFFIC CONTROL DEVICES REQUIRED FOR ROAD OR STREET CONSTRUCTION. TRAFFIC CONTROL PLAN SHALL BE SUBMITTED PRIOR TO COMMENCEMENT OF CONSTRUCTION FOR APPROVAL BY THE ENGINEER AND CCRC.
3. CONSTRUCTION STAKING SHALL BE THE RESPONSIBILITY OF THE CONTRACTOR. (SEE SPECIFICATION SECTION 01050)
4. DIMENSIONS ARE TO EDGE OF CONCRETE, ASPHALT, OR GRAVEL.
5. SITE CONTRACTOR SHALL COORDINATE INSTALLATION OF ALL SLEEVES NECESSARY FOR IRRIGATION AND SITE ELECTRICAL DISTRIBUTION – SLEEVES LOCATIONS ON THE PLANS ARE APPROXIMATE AND ARE THE MINIMUM REQUIRED.

## Grading Notes

1. CONSTRUCTION STAKING SHALL BE THE RESPONSIBILITY OF THE CONTRACTOR.
2. ELEVATIONS SHOWN ARE BASED ON NAVD 88
3. INSTALL MULCH BLANKET ON ALL SLOPE GREATER THAN 4:1
4. SITE CONTRACTOR SHALL COORDINATE INSTALLATION OF ALL SLEEVES NECESSARY FOR IRRIGATION AND SITE ELECTRICAL DISTRIBUTION.
5. SITEWORK CONTRACTOR IS RESPONSIBLE FOR ROUGH GRADING OF SITE, TOPSOIL PLACEMENT, FINAL GRADING, SEEDING, HYDROSEEDING AND PLACEMENT OF MULCH BLANKET ON SLOPES GREATER THAN 4:1 TO MEET S.E.S.C GUIDELINES AND PERMIT DIRECTIVES.

## Retaining Wall Notes

1. ALL RETAINING WALL TO HAVE MIN. 6" AGG. COMPACTED BASE.
2. WALL ELEVATIONS TO GUIDE CONTRACTOR AND SHOW INTENT. CONTRACTOR TO MAKE WALL ADJUSTMENTS AS NECESSARY TO COMPLY WITH ALL CODES AND GRADES ADJACENT TO WALL.

## Site Utility Notes

1. MINIMUM COVER ON ALL BURIED WATER LINES, 3'–0". UNLESS OTHERWISE NOTED.
2. SITE ELECTRICAL DIAGRAMS, LAYOUTS, COMPONENT SIZING AND MATERIALS INTENDED TO GUIDE CONTRACTOR FOR PLANNING AND PRICING PURPOSES. IT IS THE CONTRACTOR'S RESPONSIBILITY TO PROVIDE ALL APPLICABLE COMPONENTS AND MATERIALS NECESSARY FOR A COMPLETE AND OPERABLE SYSTEM.
3. CONTRACTOR TO COORDINATE ALL TESTING AND START–UP OF UTILITIES.

## General Electrical Notes

1. ALL ELECTRICAL LINES UNDER VEHICULAR PAVEMENT SHALL BE ENCASED IN 4" SCHED. 40 SLEEVE, MIN. 36" BELOW FINAL GRADE AND EXTEND MIN. 3' BEYOND PAVEMENT EDGE.
2. LOCATE PROGRAMMABLE TIMER AND DIMMING CAPABILITIES FOR SITE LIGHTING.
3. ALL ELECTRICAL SHALL MEET UNIVERSAL AND LOCAL CODE. SHOP DRAWINGS OF ELECTRICAL LAYOUT AND ASSEMBLY TYPE AND LOCATION SHALL BE PROVIDED AND APPROVED BY THE ENGINEER PRIOR TO PURCHASING AND INSTALLING ANY SYSTEM COMPONENTS.
4. SITE CONTRACTOR SHALL COORDINATE INSTALLATION OF ALL SLEEVES NECESSARY FOR IRRIGATION AND SITE ELECTRICAL DISTRIBUTION – SLEEVES LOCATIONS ON THE PLANS ARE APPROXIMATE AND ARE THE MINIMUM REQUIRED.

1

## Low Voltage Lighting Notes

1. THIS PLAN IS INTENDED FOR LANDSCAPE LIGHTING PURPOSES ONLY. ALL LIGHTING FIXTURES AND TRANSFORMERS SHALL BE INSTALLED PER MANUFACTURER'S SPECIFICATIONS. IT IS THE CONTRACTOR'S RESPONSIBILITY TO MAINTAIN COMPLIANCE WITH THE NATIONAL ELECTRIC CODE (CURRENT EDITION) AND ALL LOCAL BUILDING SAFETY CODES AND ORDINANCES.
2. FIXTURES ARE SHOWN IN APPROXIMATE LOCATION. THE CONTRACTOR SHALL FIELD VERIFY THE ACTUAL PLACEMENT OF EACH FIXTURE UPON COMPLETION OF LANDSCAPE INSTALLATION.
3. ALL PATHLIGHTS TO BE INSTALLED AT A MINIMUM OF 18" FROM ANY SIDEWALK EDGE OR STRUCTURE.
4. ALL HUBS SHALL BE LABELED AND INSTALLED PRIMARILY IN PLANTER AREAS 2" ABOVE FINISHED GRADE; OR IN A READILY ACCESSIBLE AREA THAT DOES NOT OBSTRUCT PATHWAYS, DRAINAGE SWALES OR COMMON AREAS.
5. IN ORDER TO MINIMIZE FUTURE DISTURBANCE, ALL WIRE RUNS SHALL BE INSTALLED PARALLEL AND ADJACENT TO HARD SURFACES SUCH AS SIDEWALKS, DRIVEWAYS AND WALLS.
6. CONTRACTOR SHALL CUT THE WIRE LEADS FROM THE FIXTURES TO LEAVE 2' OF WIRE LEAD REMAINING. COIL EXCESS 2' COILED IN EACH HUB.
7. ALL UNDERGROUND SPLICES SHALL BE INSTALLED IN APPROVED IN–GROUND HUBS WITH WATER–TIGHT CONNECTIONS.
8. ALL EXTERIOR 120–VOLT ELECTRICAL OUTLETS SHALL BE GFI PROTECTED AS PER NATIONAL ELECTRICAL CODE.
9. ALL TRANSFORMERS HARDWIRED INTO OUTDOOR RECEPTACLE.
10. ALL PLUG–IN TRANSFORMERS SHALL HAVE A "DRIP LOOP" IN THE POWER CORD.
11. ALL EXPOSED WIRES SHALL BE UV RATED, PROTECTED AND PAINTED.
12. THE INSTALLING CONTRACTOR SHALL BE RESPONSIBLE FOR ADJUSTING THE FIXTURES AT NIGHT IN ORDER TO HELP REDUCE GLARE AND TO ARCHIVE OPTIMUM LIGHTING EFFECT INTENDED BY THE LIGHTING DESIGN.
13. THE GLARE CONTROL KIT SHALL CONSIST OF A ROTATIONAL SHROUD, FROSTED, LINEAR AND SPREAD LENS AND A HEX LOUVER TO MINIMIZE GLARE UP TO A 45 DEGREE ANGLE.
14. A FROSTED LENS SHALL BE USED IN ANY DOWN LIGHT THAT IS PLACED UNDER 12' IN HEIGHT.

FOR ANY QUESTIONS, PLEASE CONTACT UNIQUE LIGHTING SYSTEMS, TOLL FREE @ 1–800–955–4831

## Survey Notes

1. THIS TOPOGRAPHICAL MAP IS BASED UPON A FIELD SURVEY PERFORMED BY GOSLING CZUBAK ENGINEERING SCIENCES, INC. DURING SEPTEMBER 2019.
2. BOUNDARY IS DEPICTED FOR INFORMATIONAL PURPOSES ONLY.
3. THIS SURVEY HAS BEEN PREPARED WITHOUT THE BENEFIT OF A CURRENT TITLE SEARCH AND THEREFORE THIS PROPERTY MAY BE SUBJECT TO EASEMENTS, RIGHT–OF–WAY TAKINGS AND RESTRICTIVE COVENANTS THAT COULD ENCUMBER THIS PARCEL OF LAND.
4. THE BEARING BASE AND COORDINATES OF THIS DRAWING ARE BASED UPON THE MICHIGAN STATE PLANE COORDINATE SYSTEM, CENTRAL ZONE, NAD 83, INTERNATIONAL FEET, 2011 ADJUSTMENT. CONTROL WAS ESTABLISHED BY GPS OBSERVATION USING THE AVAILABLE MDOT CONTINUOUSLY OPERATING STATIONS (CORS).
5. THE VERTICAL DATUM OF THIS SURVEY IS BASED UPON NAVD 88. CONTROL WAS ESTABLISHED BY GPS OBSERVATION USING THE AVAILABLE MDOT CONTINUOUSLY OPERATING STATIONS (CORS).
6. THE UTILITY INFORMATION SHOWN ON THIS SURVEY IS SHOWN BASED UPON A COMBINATION OF RECORD INFORMATION AND FIELD MEASUREMENTS. THE SURVEYOR DOES NOT GUARANTEE THAT ALL UNDERGROUND UTILITIES ARE SHOWN AND/OR POSITIONED PROPERLY ON THIS DRAWING DUE TO AMBIGUOUS PLANS AND RECORDS PROVIDED TO US. THE INFORMATION SHOWN ON THIS DRAWING IS INTENDED TO BE USED AS A GUIDE FOR POSSIBLE UNDERGROUND UTILITY CONFLICTS. IT IS THE RESPONSIBILITY OF OTHERS TO RESOLVE THE ACTUAL LOCATION OF ANY UNDERGROUND UTILITY THROUGH THE MISS DIG FIELD VERIFICATION SYSTEM PRIOR TO ANY SITE EXCAVATION. CALL 811 OR 800–482–7171.

## S.E.S.C. Notes

1. NOTATION REFERS TO MICHIGAN DEPARTMENT OF MANAGEMENT AND BUDGET SESC KEYING SYSTEM.
2. ALL RIP RAP NOT SPECIFICALLY SIZED ON PLANS OR ON SPECIFICATION IS TO BE 4"–6" STONE.
3. ALL INLET STORM STRUCTURES ARE TO BE PROTECTED BY INLET PROTECTION AND CLEANED REGULARLY.
4. SOIL EROSION AND SEDIMENTATION CONTROL SHALL PROTECT AGAINST LOSS OF SOIL BY THE ACTION OF WATER, ICE AND GRAVITY OF WIND.
5. THE CONTRACTOR SHALL FOLLOW THE PROCEDURES DELINEATED BELOW AND CONSTRUCT AND MAINTAIN THE FACILITIES SHOWN ON THE DRAWINGS TO CONTROL WATER AND WIND EROSION DURING CONSTRUCTION OF THE PROJECT. THE CONTRACTOR SHALL IMPLEMENT ANY ADDITIONAL MEASURES, NOT SHOWN ON THE PLANS, NECESSARY TO MINIMIZE SOIL EROSION AND SEDIMENTATION.
   A. ALL DISTURBED SURFACE AREAS (INCLUDING UTILITY TRENCHES) SHALL BE TEMPORARILY GRADED AND/OR DITCHED TO DIRECT STORM RUNOFF FROM SUCH AREAS TO SEDIMENTATION CONTROL DEVICES TO PREVENT SEDIMENT CARRYING RUNOFF FROM ENTERING A WATERCOURSE, SEWER, OR ADJACENT LANDS. SUCH SEDIMENTATION CONTROL DEVICES INCLUDE BUT ARE NOT LIMITED TO: PROTECTIVE DITCHES, SEDIMENT TRAPS, SEDIMENT FILTERS, DITCH TRAPS, PIPE BARRIERS, STRAW BALE BERMS AND FILTERS AS DETAILED AND REQUIRED AND LOCATED ON THE DRAWINGS. AFTER THE PROJECT WORK HAS BEEN COMPLETED, INSPECTED AND APPROVED, THE CONTRACTOR SHALL REMOVE ALL TEMPORARY SEDIMENTATION CONTROL DEVICES, MATERIAL AND THEIR COLLECTED SILT AND DEBRIS AND COMPLETE THE PROJECT WORK IN ACCORDANCE WITH THE DRAWINGS AND SPECIFICATIONS.
   B. IN ROADWAY AREAS TEMPORARY AGGREGATE SURFACING SHALL BE PLACED IMMEDIATELY AFTER THE BACKFILLING HAS BEEN COMPLETED. DUST CONTROL MEASURES SHALL BE USED AT ALL TIMES. CONTRACTOR SHALL CONTROL DUST BY SPRINKLING, OR BY OTHER METHODS AS DIRECTED BY ENGINEER AND/OR OWNER'S REPRESENTATIVE AT NO ADDITIONAL COST TO OWNER.
   C. WITHIN 15 DAYS FROM THE DATE A PROJECT IMPROVEMENT IS INSTALLED THE CONTRACTOR SHALL COMPLETE FINAL CLEANUP AND RESTORATION OF THE PROJECT AREA DISTURBED INCLUDING SPILL AREAS. IF SEASONAL CONDITIONS PREVENT FINAL CLEANING AND RESTORATION, THE CONTRACTOR SHALL PROCEED WITH TEMPORARY STABILIZATION OF THE DISTURBED AREAS. FINAL CLEANUP AND RESTORATION WILL CONSIST OF FINAL GRADING, PAVING, PLACING TOPSOIL, SEED AND MULCH, AND/OR SODDING OF ALL DISTURBED AREAS OF THE PROJECT. TEMPORARY STABILIZATION SHALL CONSIST OF ROUGH GRADING THE DISTURBED AREAS TO A CONDITION READY TO RECEIVE TOPSOIL, SEEDING, AND MULCHING IN ACCORDANCE WITH SPECIFICATION SECTION 02270 FOR THE PROJECT. TEMPORARY STABILIZATION MATERIALS SHALL BE REMOVED AND DISPOSED OF AND FINAL CLEANUP AND RESTORATION SHALL BE COMPLETED NOT LATER THAN 60 DAYS AFTER SEASONAL CONDITIONS ALLOW PERFORMANCE OF THE REQUIRED WORK.
   D. THE CONTRACTOR SHALL MINIMIZE THE DEPOSITION OF DIRT AND MUD ONTO PUBLIC ROADS. ALL DIRT AND MUD TRACKED ONTO PUBLIC ROADS SHALL BE REMOVED DAILY. ROADS SHALL ALSO BE CLEANED IMMEDIATELY FOLLOWING A RAIN EVENT. DIRT OR MUD WHICH COULD BE CONSTRUED AS A TRAFFIC HAZARD SHALL BE REMOVED IMMEDIATELY.
   E. FOR ANY WORK ON THE COUNTY OR CITY RIGHT–OF–WAY, THE GRADING CONTRACTOR SHALL; A. NOT STORE MATERIAL, EXCESS DIRT OR EQUIPMENT IN THE RIGHT–OF–WAY IN CASE OF MULTI–LANE HIGHWAYS. THE PAVEMENT SHALL BE KEPT FREE FROM ANY MUD OR EXCAVATION WASTE FROM TRUCKS OR OTHER EQUIPMENT.
   F. CATCH BASINS SHALL BE PERIODICALLY CLEANED AND FILTER FABRIC CHANGED AND MAINTAINED.
6. ALL EARTH CHANGES SHALL BE DESIGNED, CONSTRUCTED, AND MAINTAINED IN SUCH A MANNER AS TO MINIMIZE THE EXTENT AND DURATION OF EARTH DISRUPTION.
7. THE CONTRACTOR SHALL LOCATE STOCKPILES IN AREAS AS SHOWN ON THE PLANS OR WITHIN THE LIMITS OF THE DISTURBED AREA(S) AS WORK PROGRESSES.
8. VEGETATIVE STABILIZATION OR OTHER SOIL EROSION CONTROL MEASURES SHALL BE INSTALLED AND MAINTAINED THROUGHOUT THE DEVELOPMENT PROCESS.
9. EARTH CHANGES ASSOCIATED WITH LARGE DEVELOPMENTS SHALL BE STAGED TO KEEP EXPOSED AREAS OF THE SOIL AS SMALL AS PRACTICABLE. CRITICAL AREAS EXPOSED DURING CONSTRUCTION SHALL BE PROTECTED WITH TEMPORARY VEGETATION, MULCHING, FILTER FENCES, OR OTHER METHODS OF STABILIZATION.
10. STORMWATER RUNOFF CONTROL AND SOIL EROSION CONTROL MEASURES SHALL BE INSTALLED BEFORE GRADING, FILLING, OR REMOVAL OF VEGETATIVE COVER IS INITIATED.
11. SEDIMENT BASINS, DESILTING BASINS, OR SILT TRAPS ARE REQUIRED AS NEEDED FOR ALL EARTH CHANGES. BASINS AND TRAPS SHALL BE SIZED TO ENTIRELY CONTAIN SEDIMENT–LADEN RUNOFF.
12. ALL PUBLIC UTILITIES SHALL BE INSTALLED IN SUCH FASHION THAT SOIL EROSION AND SEDIMENTATION IS MINIMIZED.
13. FILTER FENCES AND OTHER SOIL EROSION CONTROL FACILITIES SHALL BE INSTALLED WHERE SHOWN ON THE PLANS.
14. WHEN IT IS NOT POSSIBLE TO PERMANENTLY STABILIZE A DISTURBED AREA AFTER AN EARTH CHANGE HAS BEEN COMPLETED OR WHEN SIGNIFICANT EARTH CHANGE ACTIVITY CEASES, TEMPORARY SOIL EROSION CONTROL MEASURES SHALL BE INSTALLED AND MAINTAINED.
15. PERMANENT EROSION CONTROL MEASURE FOR ALL SLOPES, CHANNELS, DITCHES, OR ANY DISTURBED LAND AREA SHALL BE COMPLETED WITHIN FIFTEEN CALENDAR DAYS AFTER FINAL GRADING OR THE FINAL EARTH CHANGE HAS BEEN COMPLETED. ALL TEMPORARY SOIL EROSION CONTROL MEASURES SHALL BE MAINTAINED UNTIL PERMANENT SOIL EROSION CONTROL MEASURES ARE ESTABLISHED.
16. SOIL EROSION CONTROL MEASURES SHALL BE MAINTAINED THROUGHOUT THE DURATION OF THE EARTH CHANGE, INCLUDING THE LATER STAGES OF DEVELOPMENT. MAINTENANCE ACTIVITIES INCLUDE, BUT ARE NOT LIMITED TO REMOVAL OF ACCUMULATED SEDIMENT, STRUCTURAL REPAIRS, RE–SEEDING, REPLACEMENT OF VEGETATIVE COVER, AND LAWN MOWING.
17. ALL TEMPORARY EROSION CONTROL FACILITIES SHOULD BE REMOVED BY THE CONTRACTOR AT THE COMPLETION OF CONSTRUCTION UNLESS ORDERED BY THE ENGINEER TO BE LEFT IN PLACE. CARE SHOULD BE TAKEN DURING REMOVAL TO MINIMIZE SILTATION IN NEARBY DRAINAGE COURSES.
18. SILT FENCE TO BE INSTALLED PRIOR TO ANY WORK ON–SITE. INLET STORM STRUCTURE SEDIMENTATION CONTROL MEASURES TO BE INSTALLED AS STRUCTURES ARE INSTALLED.
19. CONTRACTOR SHALL PROTECT WETLANDS AND 25' SETBACK FROM CONSTRUCTION ACTIVITY. CONSTRUCTION ACTIVITY TO REMAIN A MINIMUM OF 25' FROM WETLAND DELINEATION AS SHOWN ON PLANS.

## SESC Maintenance Program

1. SITE CONTRACTOR TO MONITOR AND ENSURE PROPER WORKING OF ALL INSTALLED SESC MEASURES THROUGHOUT CONSTRUCTION.
2. CONTRACTOR RESPONSIBLE FOR FINAL RESTORATION SEEDING AND MULCHING PRIOR TO FINAL COMPLETION OF THE WORK.
3. CONTRACTOR RESPONSIBLE TO MAINTAIN ALL SESC MEASURES REMAINING AFTER FINAL COMPLETION UNTIL ESTABLISHMENT AND FINAL ACCEPTANCE BY THE PROFESSIONAL.
4. CONTRACTOR RESPONSIBLE FOR PROVIDING INSPECTIONS AND REPORTING TO THE PROFESSIONAL BY CERTIFIED STORMWATER OPERATOR FOR THE DURATION OF THE PROJECT PER DTMB AND SESC GUIDELINES.


Gosling Czubak
engineering sciences, inc.
1280 Business Park Dr.
Traverse City, Michigan
231-946-9191 phone
info@goslingczubak.com
www.goslingczubak.com

CIVIL ENGINEERING
SURVEYING
ENVIRONMENTAL SERVICES
GEOTECHNICAL
CONSTRUCTION SERVICES
DRILLING
LANDSCAPE ARCHITECTURE


| No. | Date | Revision | By |
|---|---|---|---|
| 01 | 01-14-2020 | ADDENDUM 001 | DAW |

**GENERAL NOTES**
**JOINING JORDAN - PROJECT #MSC 218022-CPF**
**EAST JORDAN DDA**

Date Issued: 12/23/2019
Date Surveyed: 09/09/2019
Designed By: KDH
Drawn By: DAW
Checked By: KSK
Scale: AS NOTED

Original sheet size is 22x34

Location:
SECTION 23
T32N R07W
CHARLEVOIX COUNTY
MICHIGAN
----

Project Number:
2019510004.03

Sheet:
**R1**

p:\2019510004.00\cadd-data\C3D\2019510004-PS-Reference and General Notes.dwg Tab: R1 GENERAL NOTES Saved by: kskrogulecki 1/13/2020 7:53 PM Plotted by: Dallas A. Wirtz, PLA, ASLA 1/13/2020 11:37 PM

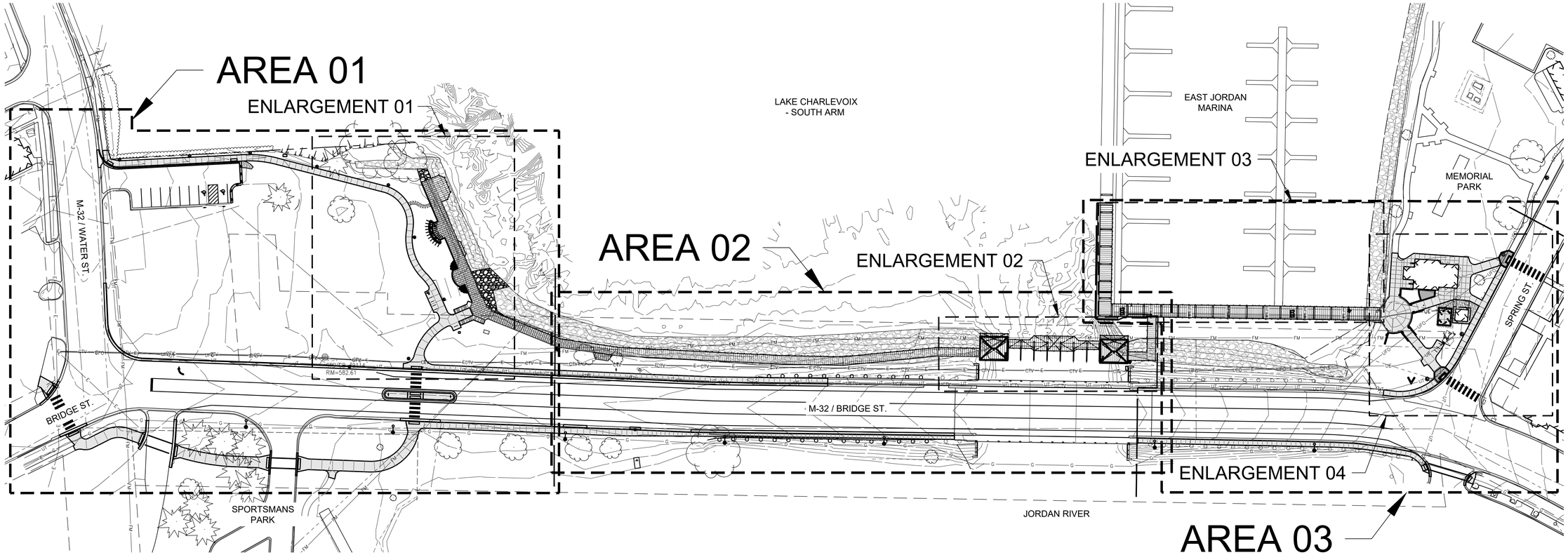


**OVERALL LAYOUT SHEET**
SCALE: 1" = 50'

NORTH

SCALE 1" = 50'
0' 50' 100'

811 Know what's below. Call before you dig.

THE LOCATION OF THE EXISTING UTILITIES, AS SHOWN ON THIS PLAN, ARE APPROXIMATE ONLY. IT SHALL BE THE RESPONSIBILITY OF THE CONTRACTOR TO VERIFY ACTUAL LOCATION AND DEPTH OF ALL EXISTING UTILITIES. THE OWNER AND THE SURVEYOR SHALL NOT BE RESPONSIBLE FOR ANY OMISSION OR VARIATION FROM THE LOCATION SHOWN. THE CONTRACTOR SHALL NOTIFY "MISS DIG" AT 1 (800) 482-7171 OR 811 THREE (3) WORKING DAYS PRIOR TO THE START OF CONSTRUCTION.


GoslingCzubak
engineering sciences, inc.
1280 Business Park Dr.
Traverse City, Michigan
231-946-9191 phone
info@goslingczubak.com
www.goslingczubak.com


CIVIL ENGINEERING
SURVEYING
ENVIRONMENTAL SERVICES
GEOTECHNICAL
CONSTRUCTION SERVICES
DRILLING
LANDSCAPE ARCHITECTURE

| No. | Date | Revision | By |
|---|---|---|---|

# OVERALL SITE PLAN
## JOINING JORDAN - PROJECT #MSC 218022-CPF
EAST JORDAN DDA

| | |
|---|---|
| Date Issued: | 12/23/2019 |
| Date Surveyed: | 09/09/2019 |
| Designed By: | KDH |
| Drawn By: | DAW |
| Checked By: | KSK |
| Scale: | AS NOTED |

Original sheet size is 22x34

Location:
SECTION 23
T32N R07W
CHARLEVOIX COUNTY
MICHIGAN

Project Number:
2019510004.03

Sheet:
**R2**

J:\2019\2019510004\Acad\dwg\CD\2019510004-PS-Reference and General Notes.dwg Tab: R2 OVERALL SITE PLAN Saved by: kenzigowski 1/13/2020 2:53 PM Plotted by: Dallas A. Wirtz P.L.A. KSLA 1/13/2020 1:13 PM

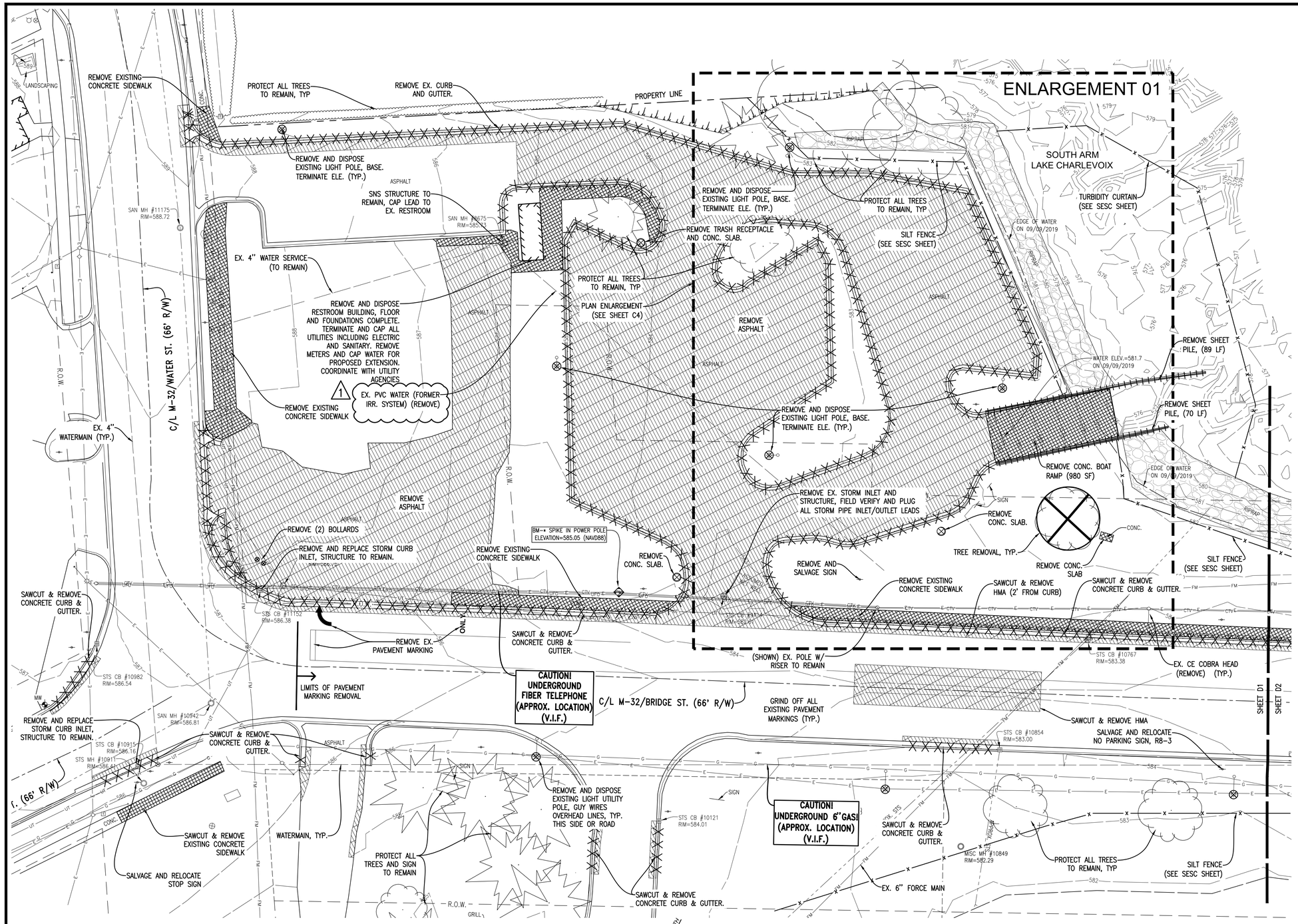


## DEMO PLAN: AREA 01

SCALE: 1" = 20'

NORTH

SCALE 1" = 20'

0' 20' 40'

## Removals Legend

- ASPHALT REMOVAL
- CONCRETE REMOVAL
- BOARDWALK / DECK REMOVAL
- CONCRETE CURB REMOVAL
- SHEET PILE REMOVAL
- TREE REMOVAL
- OBJECT REMOVAL
- 1 EX. LIGHT POLE REMOVAL
- EX. COBRA HEAD REMOVAL (ONLY NORTH SIDE)

1 ADDED EXISTING UTILITY INFORMATION AND GENERAL CLARIFICATIONS THIS SHEET

811 Know what's below. Call before you dig.

THE LOCATION OF THE EXISTING UTILITIES, AS SHOWN ON THIS PLAN, ARE APPROXIMATE ONLY. IT SHALL BE THE RESPONSIBILITY OF THE CONTRACTOR TO VERIFY ACTUAL LOCATION AND DEPTH OF ALL EXISTING UTILITIES. THE OWNER AND THE SURVEYOR SHALL NOT BE RESPONSIBLE FOR ANY OMISSION OR VARIATION FROM THE LOCATION SHOWN. THE CONTRACTOR SHALL NOTIFY "MISS DIG" AT 1 (800) 482-7171 OR 811 THREE (3) WORKING DAYS PRIOR TO THE START OF CONSTRUCTION.


GoslingCzubak
engineering sciences, inc.
1280 Business Park Dr.
Traverse City, Michigan
231-946-9191 phone
info@goslingczubak.com
www.goslingczubak.com


CIVIL ENGINEERING
SURVEYING
ENVIRONMENTAL SERVICES
GEOTECHNICAL
CONSTRUCTION SERVICES
DRILLING
LANDSCAPE ARCHITECTURE

| No. | Date | Revision | By |
|---|---|---|---|
| 01 | 01-14-2020 | ADDENDUM | DAW |

# EXISTING CONDITIONS & DEMO PLAN 01
# JOINING JORDAN - PROJECT #MSC 218022-CPF
## EAST JORDAN DDA

| | |
|---|---|
| Date Issued: | 11-19-2019 |
| Date Surveyed: | 09-09-2019 |
| Designed By: | KDH |
| Drawn By: | DAW |
| Checked By: | KSK |
| Scale: | AS NOTED |

Original sheet size is 22x34

Location:
SECTION 23
T32N R07W
CHARLEVOIX COUNTY
MICHIGAN
---

Project Number:
2019510004.03

Sheet:
**D1**

2019510004\Gdwgs\Sheets\2019510004-PP-Sheet & Demo.dwg, Tab: D1 EXISTING CONDITIONS & DEMO PLAN 01, Saved by: daw(ac 11/13/2020 10:33 PM, Plotted by: Debra A. Vinz, PLA, ASLA 11/13/2020 11:07 PM

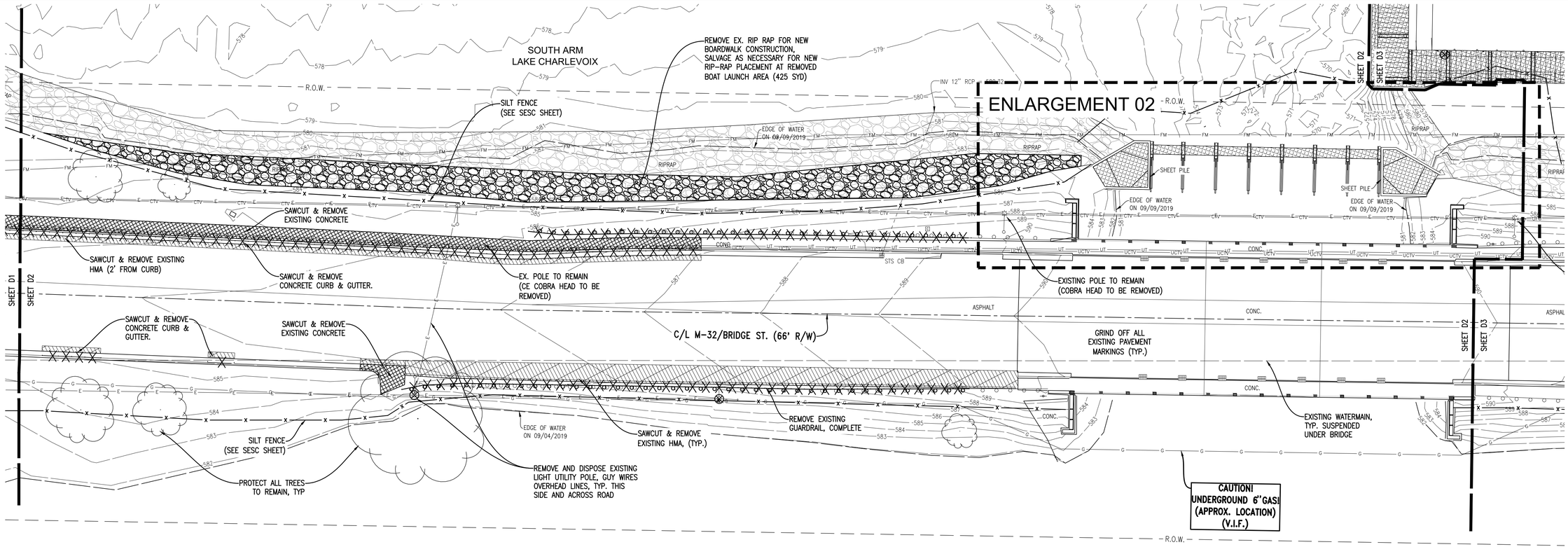


## DEMO PLAN: AREA 02

SCALE: 1" = 20'

NORTH

SCALE 1" = 20'

0' 20' 40'

## Removals Legend

- ASPHALT REMOVAL
- CONCRETE REMOVAL
- BOARDWALK / DECK REMOVAL
- CONCRETE CURB REMOVAL
- SHEET PILE REMOVAL
- TREE REMOVAL
- OBJECT REMOVAL
- 1 EX. LIGHT POLE REMOVAL
- EX. COBRA HEAD REMOVAL (ONLY NORTH SIDE)

1 ADDED EXISTING UTILITY INFORMATION AND GENERAL CLARIFICATIONS THIS SHEET

811 Know what's below. Call before you dig.

THE LOCATION OF THE EXISTING UTILITIES, AS SHOWN ON THIS PLAN, ARE APPROXIMATE ONLY. IT SHALL BE THE RESPONSIBILITY OF THE CONTRACTOR TO VERIFY ACTUAL LOCATION AND DEPTH OF ALL EXISTING UTILITIES. THE OWNER AND THE SURVEYOR SHALL NOT BE RESPONSIBLE FOR ANY OMISSION OR VARIATION FROM THE LOCATION SHOWN. THE CONTRACTOR SHALL NOTIFY "MISS DIG" AT 1 (800) 482-7171 OR 811 THREE (3) WORKING DAYS PRIOR TO THE START OF CONSTRUCTION.


Gosling Czubak
engineering sciences, inc.
1280 Business Park Dr.
Traverse City, Michigan
231-946-9191 phone
info@goslingczubak.com
www.goslingczubak.com


CIVIL ENGINEERING
SURVEYING
ENVIRONMENTAL SERVICES
GEOTECHNICAL
CONSTRUCTION SERVICES
DRILLING
LANDSCAPE ARCHITECTURE

| No. | Date | Revision | By |
|---|---|---|---|
| 01 | 01-14-2020 | ADDENDUM 001 | DAW |

# EXISTING CONDITIONS & DEMO PLAN 02
# JOINING JORDAN - PROJECT #MSC 218022-CPF
## EAST JORDAN DDA

| | |
|---|---|
| Date Issued: | 12/23/2019 |
| Date Surveyed: | 09/09/2019 |
| Designed By: | KDH |
| Drawn By: | DAW |
| Checked By: | KSK |
| Scale: | AS NOTED |

Original sheet size is 22x34

Location:
SECTION 23
T32N R07W
CHARLEVOIX COUNTY
MICHIGAN
---

Project Number:
2019510004.03

Sheet:
**D2**

I:\2019510004 Octoberfest\CSD\2019510004-PS-Sand & Dune.dwg Tab: D2 EXISTING CONDITIONS & DEMO PLAN 02 Saved by: daw(tz-11)3/2020 10:31PM Plotted by: Daw A. Vinz; FLA; AS-A 01/13/2020 11:38 PM

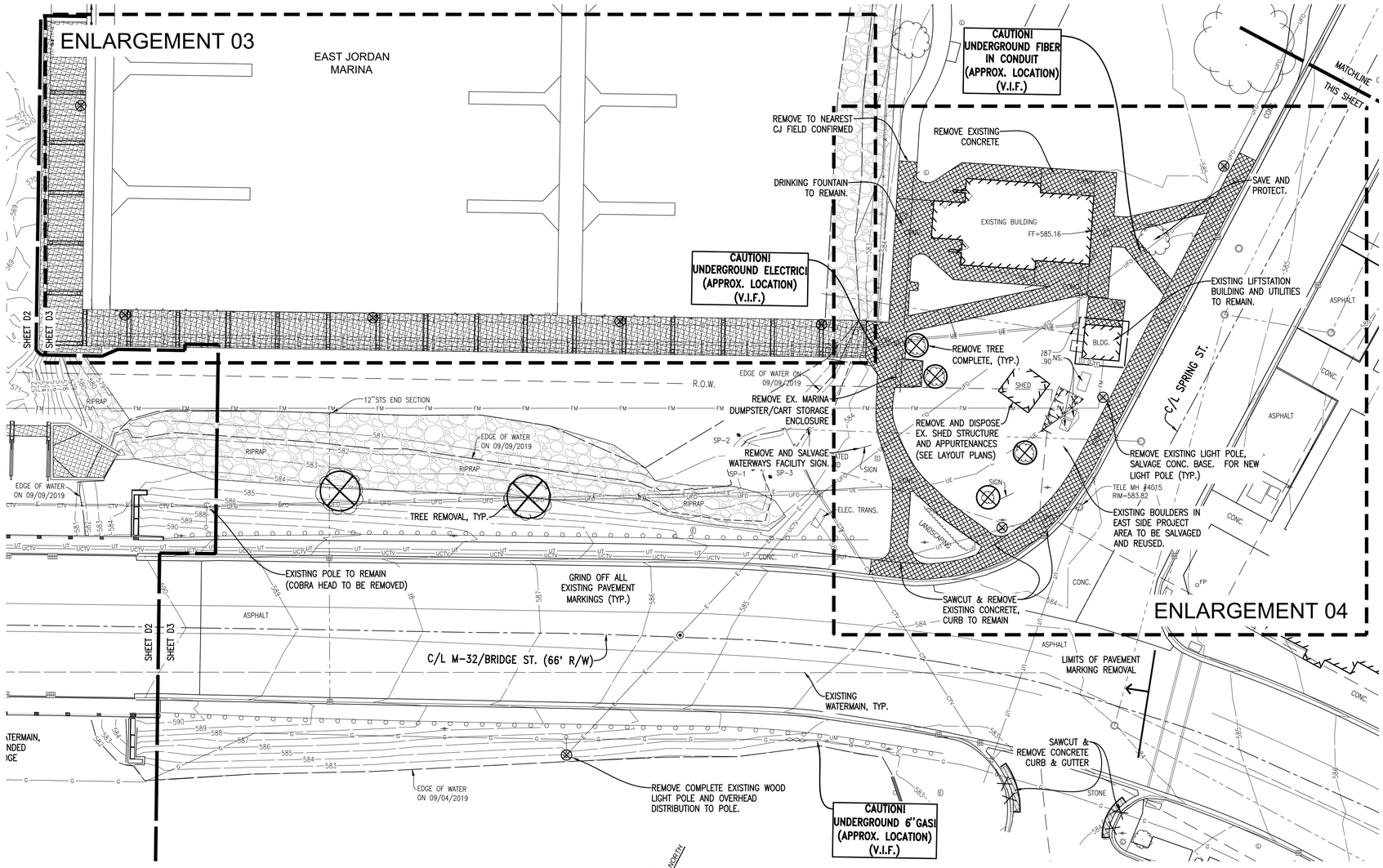


## DEMO PLAN: AREA 03

SCALE: 1" = 20'

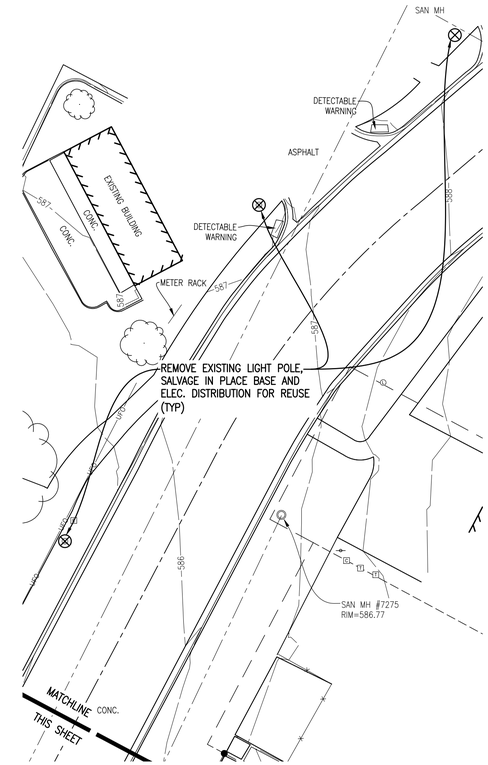


## DEMO PLAN: AREA 03 CONT.

SCALE: 1" = 20'

## Removals Legend

- ASPHALT REMOVAL
- CONCRETE REMOVAL
- BOARDWALK / DECK REMOVAL
- CONCRETE CURB REMOVAL
- SHEET PILE REMOVAL
- TREE REMOVAL
- OBJECT REMOVAL
- 1 EX. LIGHT POLE REMOVAL
- EX. COBRA HEAD REMOVAL (ONLY NORTH SIDE)

1 ADDED EXISTING UTILITY INFORMATION AND GENERAL CLARIFICATIONS THIS SHEET

811 Know what's below. Call before you dig.

THE LOCATION OF THE EXISTING UTILITIES, AS SHOWN ON THIS PLAN, ARE APPROXIMATE ONLY. IT SHALL BE THE RESPONSIBILITY OF THE CONTRACTOR TO VERIFY ACTUAL LOCATION AND DEPTH OF ALL EXISTING UTILITIES. THE OWNER AND THE SURVEYOR SHALL NOT BE RESPONSIBLE FOR ANY OMISSION OR VARIATION FROM THE LOCATION SHOWN. THE CONTRACTOR SHALL NOTIFY "MISS DIG" AT 1 (800) 482-7171 OR 811 THREE (3) WORKING DAYS PRIOR TO THE START OF CONSTRUCTION.


GoslingCzubak
engineering sciences, inc.
1280 Business Park Dr.
Traverse City, Michigan
231-946-9191 phone
info@goslingczubak.com
www.goslingczubak.com


CIVIL ENGINEERING
SURVEYING
ENVIRONMENTAL SERVICES
GEOTECHNICAL
CONSTRUCTION SERVICES
DRILLING
LANDSCAPE ARCHITECTURE

| No. | Date | Revision | By |
|---|---|---|---|
| 01 | 01-14-2020 | ADDENDUM 001 | DAW |

# EXISTING CONDITIONS & DEMO PLAN 03
# JOINING JORDAN - PROJECT #MSC 218022-CPF
EAST JORDAN DDA

| | |
|---|---|
| Date Issued: | 12/23/2019 |
| Date Surveyed: | 09/09/2019 |
| Designed By: | KDH |
| Drawn By: | DAW |
| Checked By: | KSK |
| Scale: | AS NOTED |

Original sheet size is 22x34

Location:
SECTION 23
T32N R07W
CHARLEVOIX COUNTY
MICHIGAN
---

Project Number:
2019510004.03

Sheet:
D3

J:\2019510004 Octoads-East\CD\2019510004-PS-Sym & Dwrs.dwg Tab: D3 EXISTING CONDITIONS & DEMO PLAN 03 Saved by: daw\tz 1/13/2020 10:31PM Plotted by: Daw A. Vinz; FLA; ASLA 1/13/2020 11:38 PM

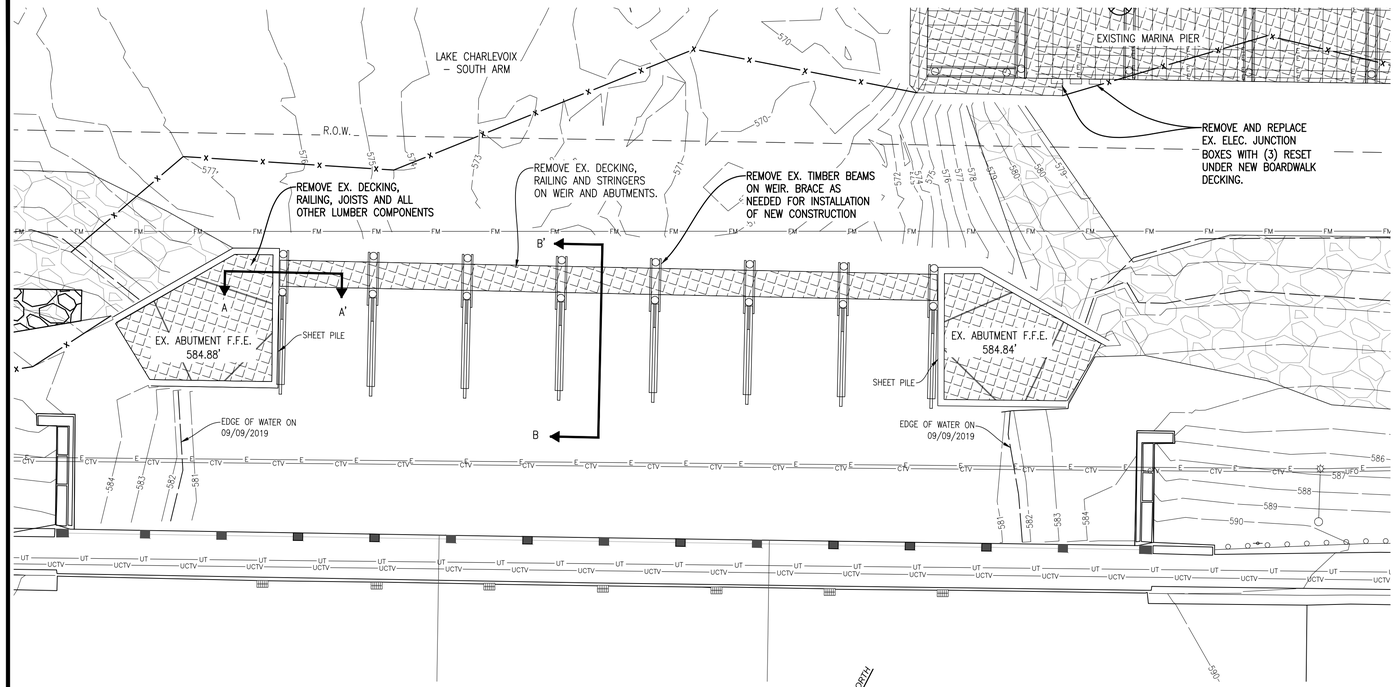


## ENLARGEMENT 02 - WEIR AND ABUTMENT DEMO PLAN

SCALE: 1" = 10'

NORTH

SCALE 1" = 10'

0' 10' 20'

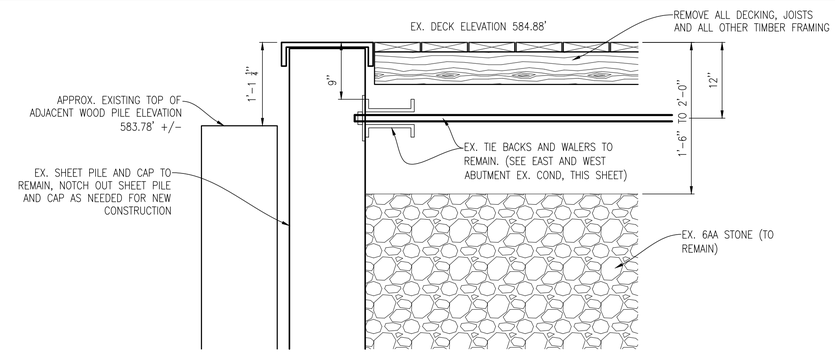


## WEIR SECTION A-A' (DEMO)

SCALE: 1" = 1'-0"

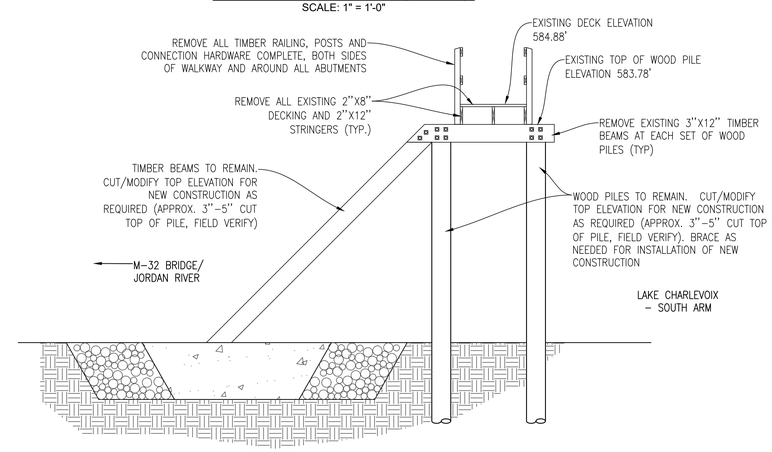


## WEIR SECTION B-B' (DEMO)

SCALE: 1/4" = 1'-0"

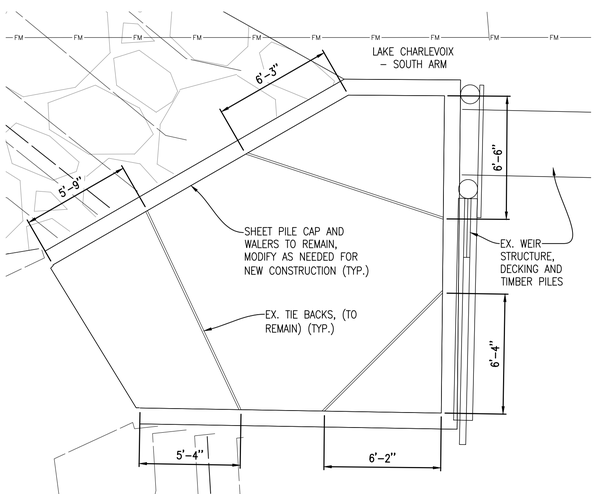


## WEST ABUTMENT EXISTING CONDITIONS

SCALE: 1/4" = 1'-0"

NORTH

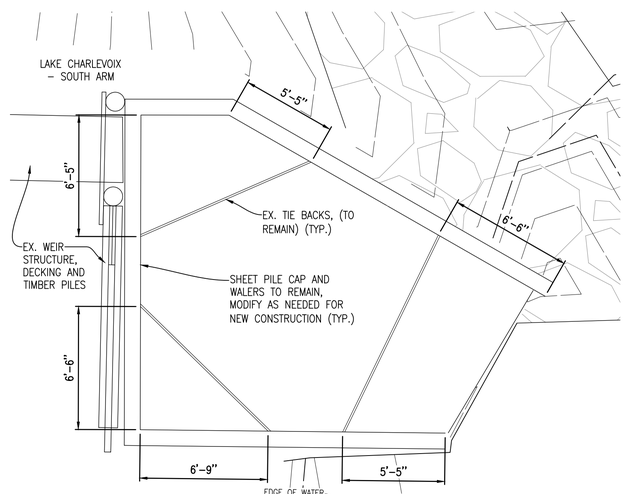


## EAST ABUTMENT EXISTING CONDITIONS

SCALE: 1/4" = 1'-0"

NORTH

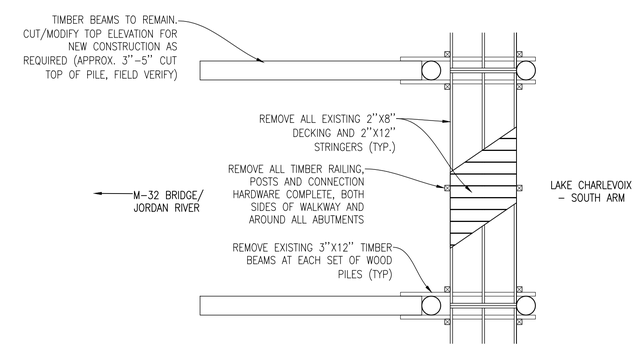


## WEIR DETAIL PLAN (DEMO)

SCALE: 1/4" = 1'-0"

NORTH

## Removals Legend

- ASPHALT REMOVAL
- CONCRETE REMOVAL
- BOARDWALK / DECK REMOVAL
- CONCRETE CURB REMOVAL
- SHEET PILE REMOVAL
- TREE REMOVAL

811 Know what's below. Call before you dig.

THE LOCATION OF THE EXISTING UTILITIES, AS SHOWN ON THIS PLAN, ARE APPROXIMATE ONLY. IT SHALL BE THE RESPONSIBILITY OF THE CONTRACTOR TO VERIFY ACTUAL LOCATION AND DEPTH OF ALL EXISTING UTILITIES. THE OWNER AND THE SURVEYOR SHALL NOT BE RESPONSIBLE FOR ANY OMISSION OR VARIATION FROM THE LOCATION SHOWN. THE CONTRACTOR SHALL NOTIFY "MISS DIG" AT 1 (800) 482–7171 OR 811 THREE (3) WORKING DAYS PRIOR TO THE START OF CONSTRUCTION.


Gosling Czubak
engineering sciences, inc.
1280 Business Park Dr.
Traverse City, Michigan
231-946-9191 phone
info@goslingczubak.com
www.goslingczubak.com


CIVIL ENGINEERING
SURVEYING
ENVIRONMENTAL SERVICES
GEOTECHNICAL
CONSTRUCTION SERVICES
DRILLING
LANDSCAPE ARCHITECTURE

| No. | Date | Revision | By |
|---|---|---|---|

# EXISTING CONDITIONS & DEMO ENLARGEMENT
# JOINING JORDAN - PROJECT #MSC 218022-CPF
## EAST JORDAN DDA

| | |
|---|---|
| Date Issued: | 12/23/2019 |
| Date Surveyed: | 09/09/2019 |
| Designed By: | KDH |
| Drawn By: | DAW |
| Checked By: | KSK |
| Scale: | AS NOTED |

Original sheet size is 22x34

Location:
SECTION 23
T32N R07W
CHARLEVOIX COUNTY
MICHIGAN
---

Project Number:
2019510004.03

Sheet:
**D4**

P:\2019\510004\Goals\Sarah\CD\201910004-PS-Sarah & Dennis.dwg - Tab: D4 EXISTING CONDITIONS & DEMO ENLARGEMENT - Sheet by: dawar 11/13/2020 10:33 PM - Plotted by: Dallas A. Wirth - PLA ASLA 11/13/2020 11:38 PM

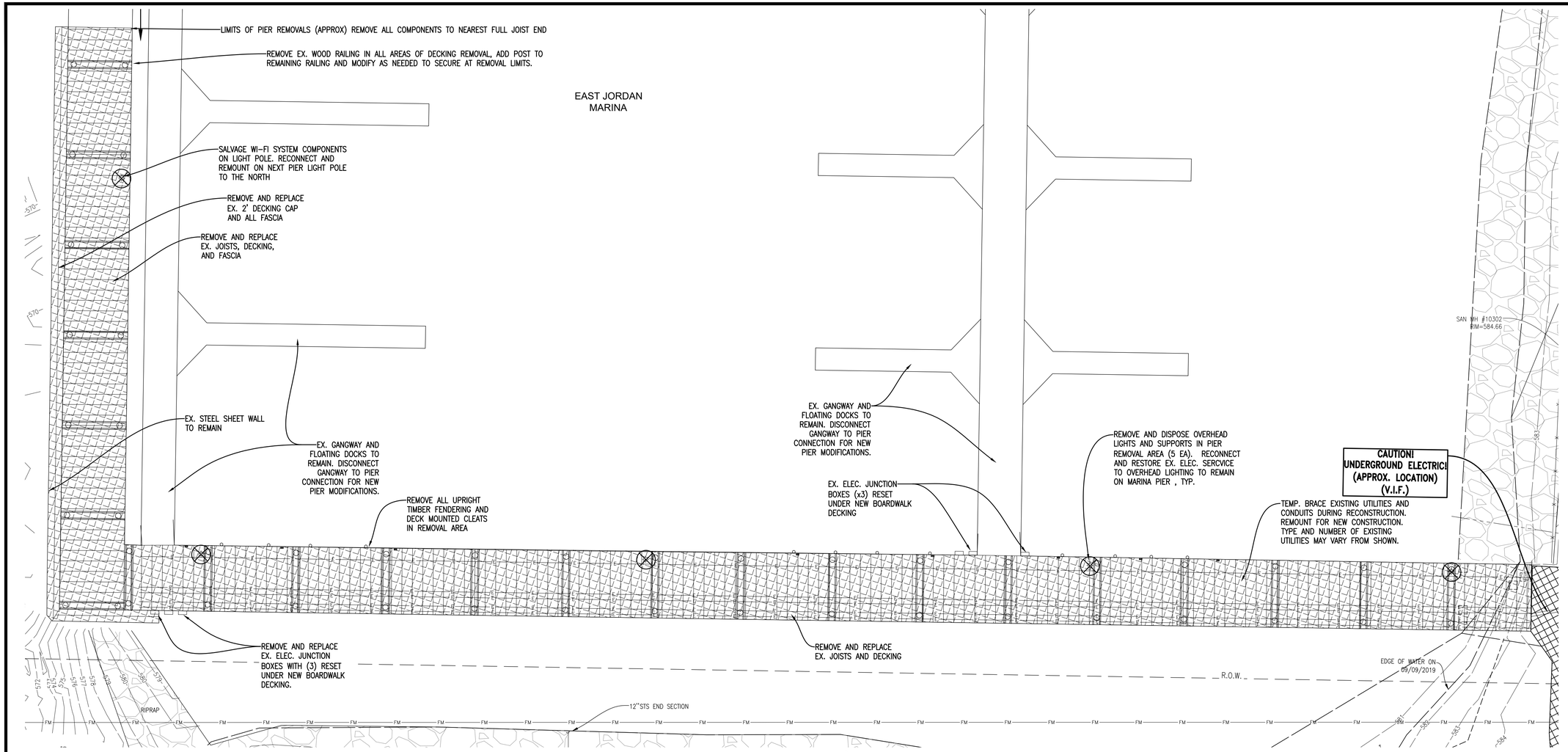


## EX. MARINA PIER DEMO

SCALE: 1" = 10'

NORTH

SCALE 1" = 10'

0' 10' 20'

## Removals Legend

- ASPHALT REMOVAL
- CONCRETE REMOVAL
- BOARDWALK / DECK REMOVAL
- CONCRETE CURB REMOVAL
- SHEET PILE REMOVAL
- TREE REMOVAL

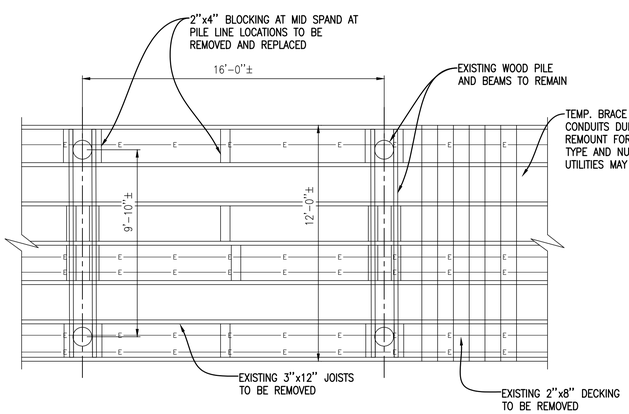


## EXISTING PIER FRAMING / DEMO

SCALE: 1/4" = 1'

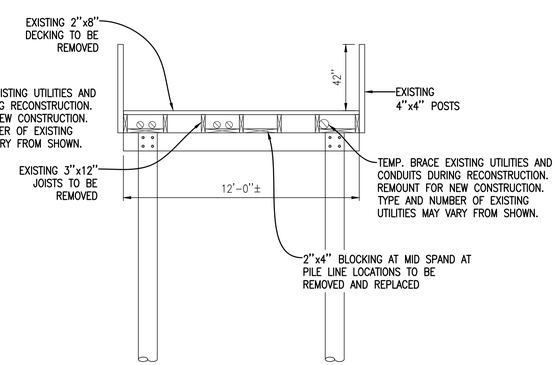


## EXISTING MAIN MARINA PIER SECTION

SCALE: 1/4" = 1'

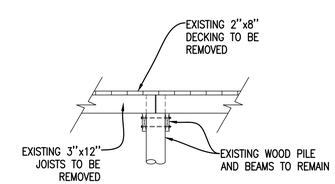


## EXISTING PIER SECTION

SCALE: 1/4" = 1'

811 Know what's below. Call before you dig.

THE LOCATION OF THE EXISTING UTILITIES, AS SHOWN ON THIS PLAN, ARE APPROXIMATE ONLY. IT SHALL BE THE RESPONSIBILITY OF THE CONTRACTOR TO VERIFY ACTUAL LOCATION AND DEPTH OF ALL EXISTING UTILITIES. THE OWNER AND THE SURVEYOR SHALL NOT BE RESPONSIBLE FOR ANY OMISSION OR VARIATION FROM THE LOCATION SHOWN. THE CONTRACTOR SHALL NOTIFY "MISS DIG" AT 1 (800) 482-7171 OR 811 THREE (3) WORKING DAYS PRIOR TO THE START OF CONSTRUCTION.


Gosling Czubak
engineering sciences, inc.
1280 Business Park Dr.
Traverse City, Michigan
231-946-9191 phone
info@goslingczubak.com
www.goslingczubak.com


CIVIL ENGINEERING
SURVEYING
ENVIRONMENTAL SERVICES
GEOTECHNICAL
CONSTRUCTION SERVICES
DRILLING
LANDSCAPE ARCHITECTURE

| No. | Date | Revision | By |
|---|---|---|---|

# EXISTING CONDITIONS & DEMO ENLARGEMENT
# JOINING JORDAN - PROJECT #MSC 218022-CPF
## EAST JORDAN DDA

| | |
|---|---|
| Date Issued: | 12/23/2019 |
| Date Surveyed: | 09/09/2019 |
| Designed By: | KDH |
| Drawn By: | DAW |
| Checked By: | KSK |
| Scale: | AS NOTED |

Original sheet size is 22x34

Location:
SECTION 23
T32N R07W
CHARLEVOIX COUNTY
MICHIGAN
---

Project Number:
2019510004.03

Sheet:
**D5**

P:\2019\510004 Gosling\Gosling\CDO\2019510004-PS-Site & Demo.dwg Tab: D5 EXISTING CONDITIONS & DEMO ENLARGEMENT Sheet by: dawdw 11/12/2020 10:33 PM Plotted by: Dallas A. Wirth, PLA, ASLA 11/12/2020 11:38 PM

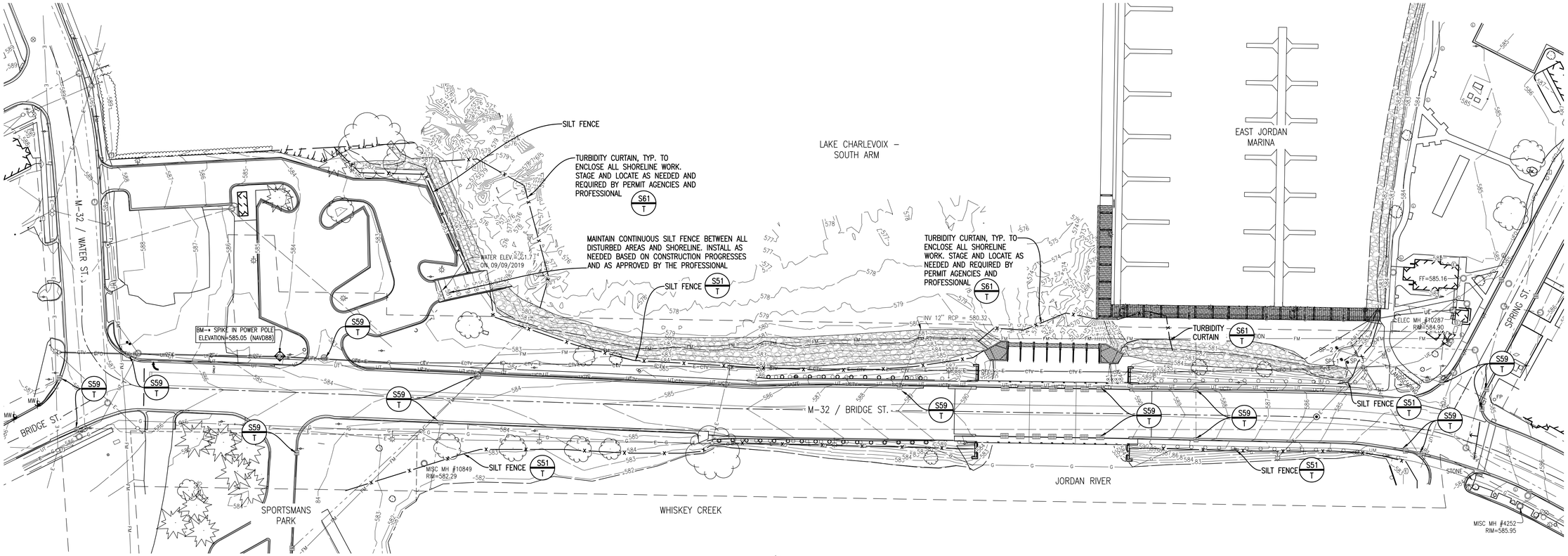


## SESC PLAN

SCALE: 1" = 50'

NORTH

SCALE 1" = 50'

0' 50' 100'

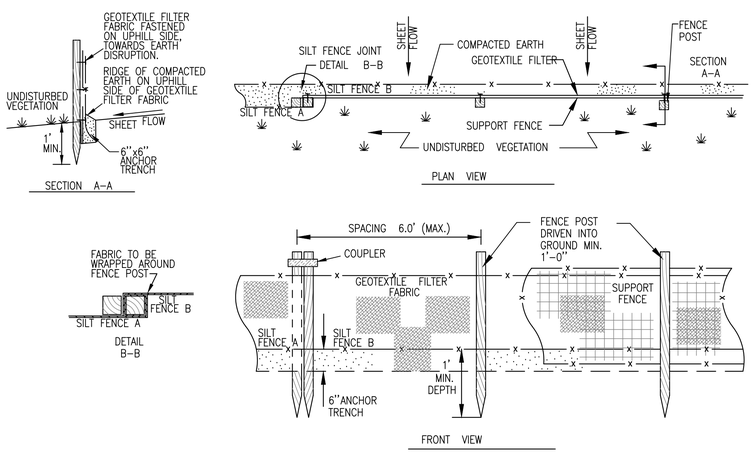


## SILT FENCE DETAIL

NOT TO SCALE

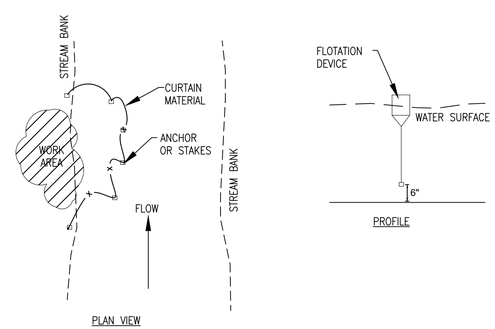


NOTES:
TYPE OF TURBIDITY CURTAIN TO BE DETERMINED BY A QUALIFIED ENGINEER or CPESC.

## TURBIDITY CURTAIN DETAIL

NOT TO SCALE

SEDIMENT CONTROL KEYING SYSTEM

ES## / P — PERMANENT – TYP.

S## / T — TEMPORARY – TYP.

ALL DISTURBED AREAS

E8 / P

E6 / P

NOTES:

1. NOTATION REFERS TO MICHIGAN DEPARTMENT OF MANAGEMENT AND BUDGET SESC KEYING SYSTEM.
2. PROVIDED FERTILIZER PER SPECIFICATIONS.
3. PROVIDE MULCH BLANKET ON SLOPES GREATER THAN 4:1.

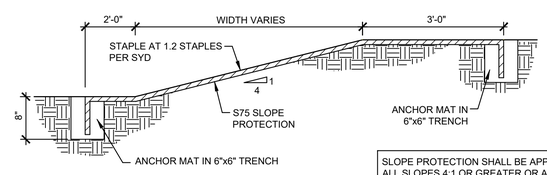


SLOPE PROTECTION SHALL BE APPLIED TO ALL SLOPES 4:1 OR GREATER OR AS INDICATED ON PLANS.

## MULCH BLANKET DETAIL

NOT TO SCALE

811 Know what's below. Call before you dig.

THE LOCATION OF THE EXISTING UTILITIES, AS SHOWN ON THIS PLAN, ARE APPROXIMATE ONLY. IT SHALL BE THE RESPONSIBILITY OF THE CONTRACTOR TO VERIFY ACTUAL LOCATION AND DEPTH OF ALL EXISTING UTILITIES. THE OWNER AND THE SURVEYOR SHALL NOT BE RESPONSIBLE FOR ANY OMISSION OR VARIATION FROM THE LOCATION SHOWN. THE CONTRACTOR SHALL NOTIFY "MISS DIG" AT 1 (800) 482–7171 OR 811 THREE (3) WORKING DAYS PRIOR TO THE START OF CONSTRUCTION.


GoslingCzubak
engineering sciences, inc.
1280 Business Park Dr.
Traverse City, Michigan
231-946-9191 phone
info@goslingczubak.com
www.goslingczubak.com


CIVIL ENGINEERING
SURVEYING
ENVIRONMENTAL SERVICES
GEOTECHNICAL
CONSTRUCTION SERVICES
DRILLING
LANDSCAPE ARCHITECTURE

| No. | Date | Revision | By |
|---|---|---|---|
| | | | |

# SESC PLAN
# JOINING JORDAN - PROJECT #MSC 218022-CPF
## EAST JORDAN DDA

| | |
|---|---|
| Date Issued: | 12/23/2019 |
| Date Surveyed: | 09/09/2019 |
| Designed By: | KDH |
| Drawn By: | DAW |
| Checked By: | KSK |
| Scale: | AS NOTED |

Original sheet size is 22x34

Location:
SECTION 23
T32N R07W
CHARLEVOIX COUNTY
MICHIGAN

Project Number:
2019510004.03

Sheet:
D6

P:\2019\10004 GOSLING\DWG\DD\2019510004-PS-Sheet & Demo.dwg, Tab: D6 SESC PLAN, Saved by: dawhite 11/13/2020 10:33 PM, Plotted by: Dallas A. Wirtz: PLA, KSJ-A 11/13/2020 11:38 PM

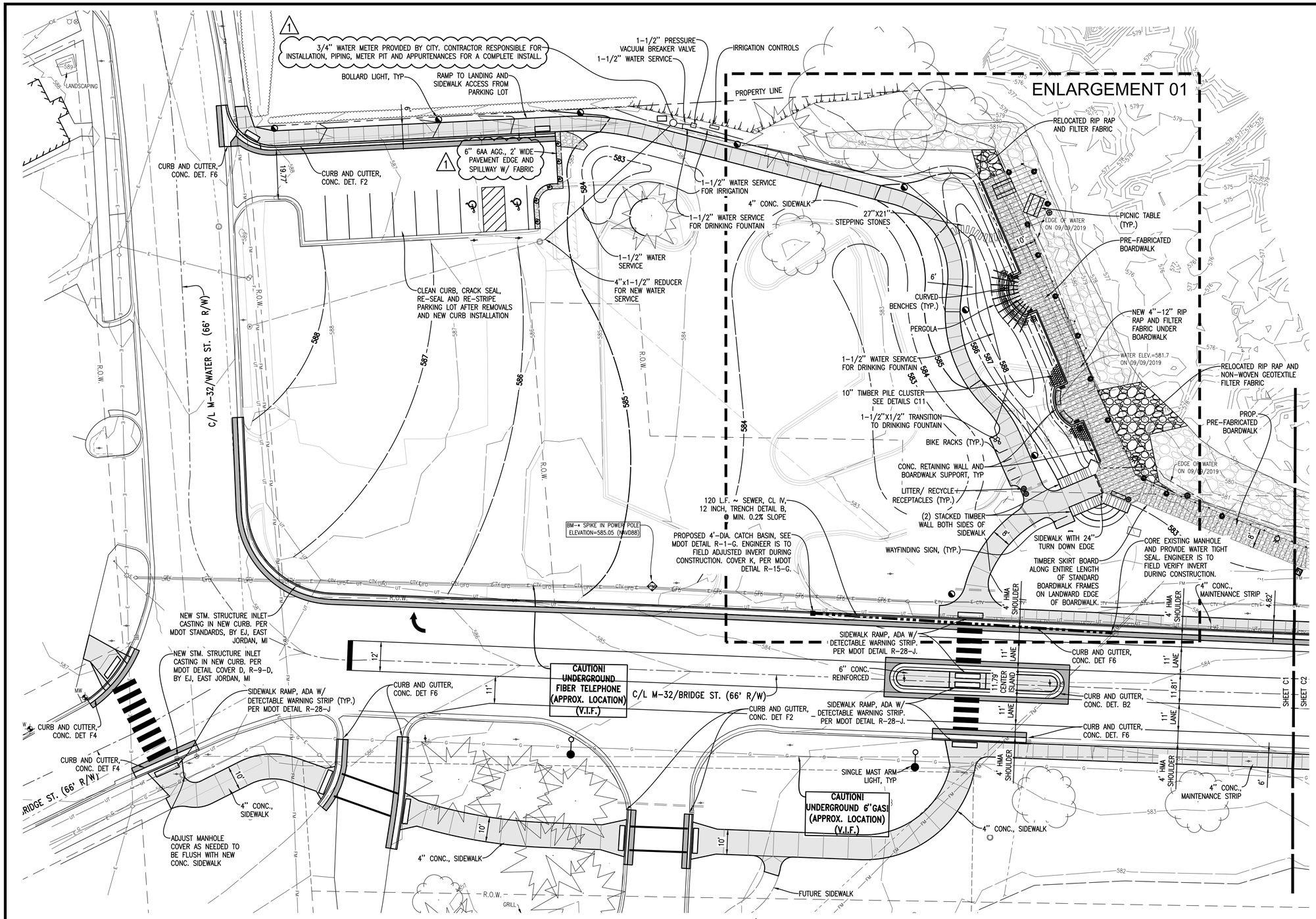


## LAYOUT PLAN: AREA 01

SCALE: 1" = 20'

NORTH

SCALE 1" = 20'

0' 20' 40'

## General Legend

- PROJECT LIMITS
- EDGE OF WATER
- EX EDGE OF GRAVEL
- EX EDGE OF CONCRETE
- EX OVERHEAD ELECTRIC
- EX CONCRETE CURB
- EX WOOD BOLLARD
- EX CONIFEROUS TREE
- EX DECIDUOUS TREE
- PROP. EDGE OF ASPHALT
- PROP. EDGE OF CONCRETE
- 576 EX. CONTOUR
- 584 PROP. CONTOUR

## Surfacing Symbol Legend

- CONCRETE PAVING
- ASPHALT PAVING

REFER TO SITE FURNISHINGS SPEC 02960 AND CONSTRUCTION DETAILS FOR PRODUCT INFORMATION REGARDING ALL SITE FURNISHINGS. 1

## Water Service Notes

1. MINIMUM COVER ON ALL BURIED WATER LINES, 3'-0" UNLESS OTHERWISE NOTED
2. WATER SERVICE LINES SHALL BE PVC, ASTM D2241, SDR21 OR EQUAL
3. WATER METER SHALL BE PROVIDED BY THE CITY OF EAST JORDAN. CONTRACTOR TO SUPPLY METER PIT, PIPING, CONNECTIONS AND APPURTENANCES FOR COMPLETE INSTALL. 1
4. PRESSURE VACUUM BREAKER SHALL BE EGLE APPROVED MODEL WITH DEKORRA ENCLOSURE 12"X14"X23" OR LARGER TO FIT BREAKER.
5. PRESSURE TEST PER AWWA C600 TESTING REQUIREMENTS FOR AN ALLOWABLE LEAKAGE NOT TO EXCEED .12 GAL. PER 2 HR PER 1000 FEET OF PIPE
6. CONDUCT DISINFECTION IN ACCORDANCE WITH AWWA C651
7. DRINKING FOUNTAIN TO BE GY SERIES BY MURDOCK MODEL GYM74. SEE SITE FURNISHING SPEC FOR DETAILS.
8. SUBMIT ALL PRODUCT DATA FOR WATER SERVICE ITEMS FOR APPROVAL PRIOR TO PURCHASE AND INSTALLATION.

811 Know what's below. Call before you dig.

THE LOCATION OF THE EXISTING UTILITIES, AS SHOWN ON THIS PLAN, ARE APPROXIMATE ONLY. IT SHALL BE THE RESPONSIBILITY OF THE CONTRACTOR TO VERIFY ACTUAL LOCATION AND DEPTH OF ALL EXISTING UTILITIES. THE OWNER AND THE SURVEYOR SHALL NOT BE RESPONSIBLE FOR ANY OMISSION OR VARIATION FROM THE LOCATION SHOWN. THE CONTRACTOR SHALL NOTIFY "MISS DIG" AT 1 (800) 482-7171 OR 811 THREE (3) WORKING DAYS PRIOR TO THE START OF CONSTRUCTION.


GoslingCzubak engineering sciences, inc.
1280 Business Park Dr.
Traverse City, Michigan
231-946-9191 phone
info@goslingczubak.com
www.goslingczubak.com


CIVIL ENGINEERING
SURVEYING
ENVIRONMENTAL SERVICES
GEOTECHNICAL
CONSTRUCTION SERVICES
DRILLING
LANDSCAPE ARCHITECTURE

| No. | Date | Revision | By |
|---|---|---|---|
| 01 | 01-14-2020 | ADDENDUM 001 | DAW |

# LAYOUT PLAN - AREA 01
# JOINING JORDAN - PROJECT #MSC 218022-CPF
## EAST JORDAN DDA

| | |
|---|---|
| Date Issued: | 12/23/2019 |
| Date Surveyed: | 09/09/2019 |
| Designed By: | KDH |
| Drawn By: | DAW |
| Checked By: | KSK |
| Scale: | AS NOTED |

Original sheet size is 22x34

Location:
SECTION 23
T32N R07W
CHARLEVOIX COUNTY
MICHIGAN
---

Project Number:
2019510004.03

Sheet:
C1


2019510004 G:\cad-data\C3D\2019\510004\PS-Site Plan.dwg Tab: C1 LAYOUT PLAN - AREA 01 Saved by: dawritz 1/13/2020 11:31 PM Plotted by: Dallas A. Witz; PLA; ASLA 1/13/2020 11:39 PM

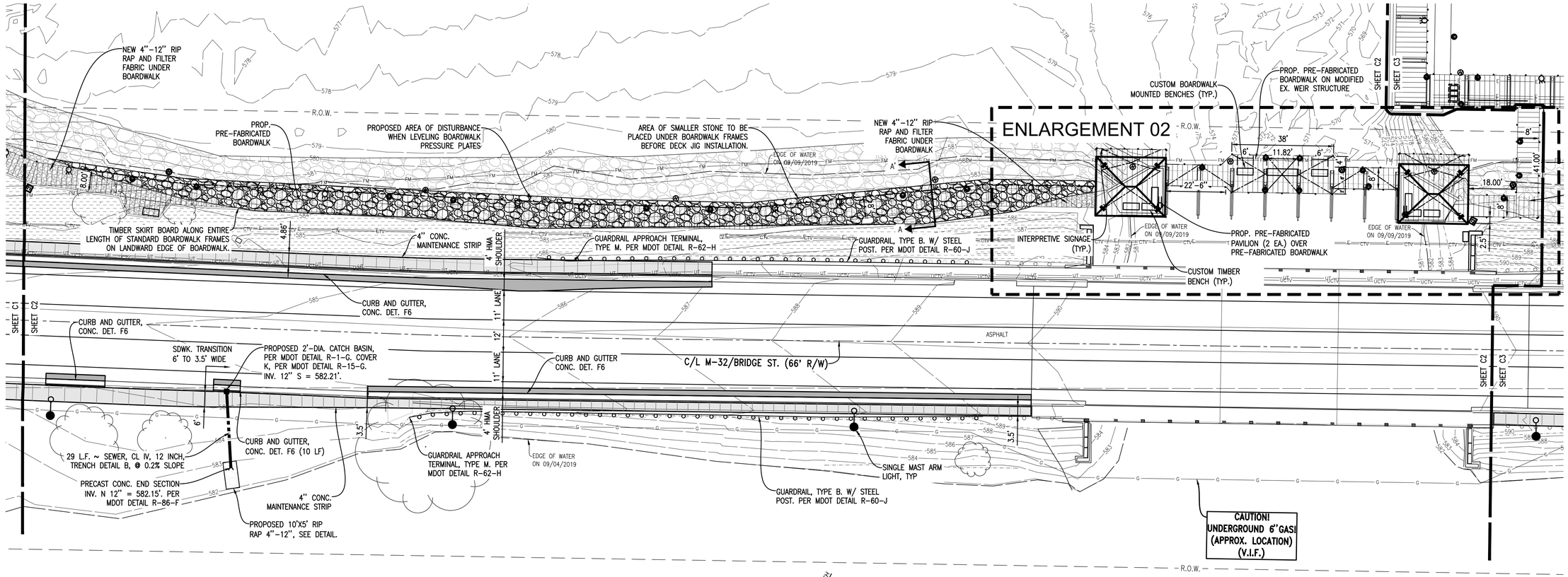


## LAYOUT PLAN: AREA 02

SCALE: 1" = 20'

NORTH

SCALE 1" = 20'

0' 20' 40'

1

| FURNITURE SYMBOL LEGEND | | |
|---|---|---|
| SYMBOL | TYPE | QTY. |
| | CURVED BENCH | 7 |
| | BENCH | 2 |
| | TRASH RECEPTACLE | 4 |
| | RECYCLE RECEPTACLE | 3 |
| | TABLE SET | 2 |
| | BOTTLE FILLER/DRINKING FOUNTAIN | 1 |
| | BIKE RACK | 7 |

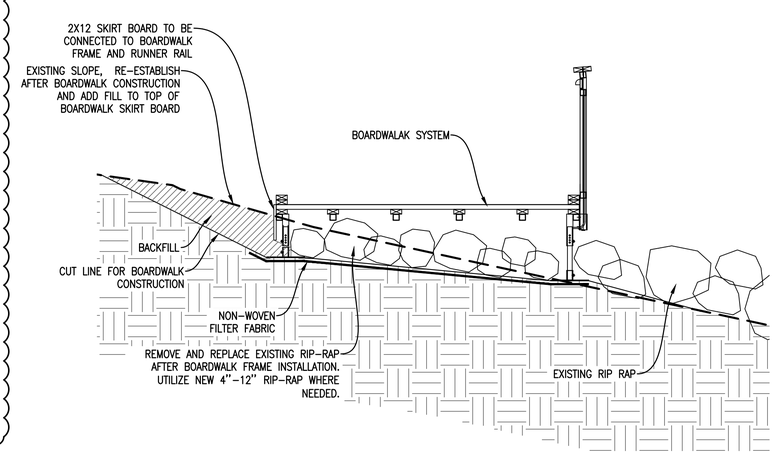


## TYPICAL BOARDWALK SECTION A-A'

SCALE: 1/2" = 1'-0"

## General Legend

- PROJECT LIMITS
- EDGE OF WATER
- EX EDGE OF GRAVEL
- EX EDGE OF CONCRETE
- EX OVERHEAD ELECTRIC
- EX CONCRETE CURB
- EX WOOD BOLLARD
- EX CONIFEROUS TREE
- EX DECIDUOUS TREE
- PROP. EDGE OF ASPHALT
- PROP. EDGE OF CONCRETE
- 576 EX. CONTOUR
- 584 PROP. CONTOUR

## Surfacing Symbol Legend

- CONCRETE PAVING
- ASPHALT PAVING

REFER TO SITE FURNISHINGS SPEC 02960 AND CONSTRUCTION DETAILS FOR PRODUCT INFORMATION REGARDING ALL SITE FURNISHINGS.

1

811 Know what's below. Call before you dig.

THE LOCATION OF THE EXISTING UTILITIES, AS SHOWN ON THIS PLAN, ARE APPROXIMATE ONLY. IT SHALL BE THE RESPONSIBILITY OF THE CONTRACTOR TO VERIFY ACTUAL LOCATION AND DEPTH OF ALL EXISTING UTILITIES. THE OWNER AND THE SURVEYOR SHALL NOT BE RESPONSIBLE FOR ANY OMISSION OR VARIATION FROM THE LOCATION SHOWN. THE CONTRACTOR SHALL NOTIFY "MISS DIG" AT 1 (800) 482-7171 OR 811 THREE (3) WORKING DAYS PRIOR TO THE START OF CONSTRUCTION.


GoslingCzubak
engineering sciences, inc.
1280 Business Park Dr.
Traverse City, Michigan
231-946-9191 phone
info@goslingczubak.com
www.goslingczubak.com


CIVIL ENGINEERING
SURVEYING
ENVIRONMENTAL SERVICES
GEOTECHNICAL
CONSTRUCTION SERVICES
DRILLING
LANDSCAPE ARCHITECTURE

| No. | Date | Revision | By |
|---|---|---|---|
| 01 | 01-14-2020 | ADDENDUM 001 | DAW |

# LAYOUT PLAN - AREA 02
# JOINING JORDAN - PROJECT #MSC 218022-CPF
## EAST JORDAN DDA

| | |
|---|---|
| Date Issued: | 12/23/2019 |
| Date Surveyed: | 09/09/2019 |
| Designed By: | KDH |
| Drawn By: | DAW |
| Checked By: | KSK |
| Scale: | AS NOTED |

Original sheet size is 22x34

Location:
SECTION 23
T32N R07W
CHARLEVOIX COUNTY
MICHIGAN
---

Project Number:
2019510004.03

Sheet:
C2

P:\2019\510004\Closed-Loop\CD\2019510004-PS-Site Plan.dwg Tab: C2 LAYOUT PLAN - AREA 02 Saved by: dawitz 1/15/2020 1:13:31 PM Plotted by: Dawitz A. White PLA ASLA 1/15/2020 11:38 PM

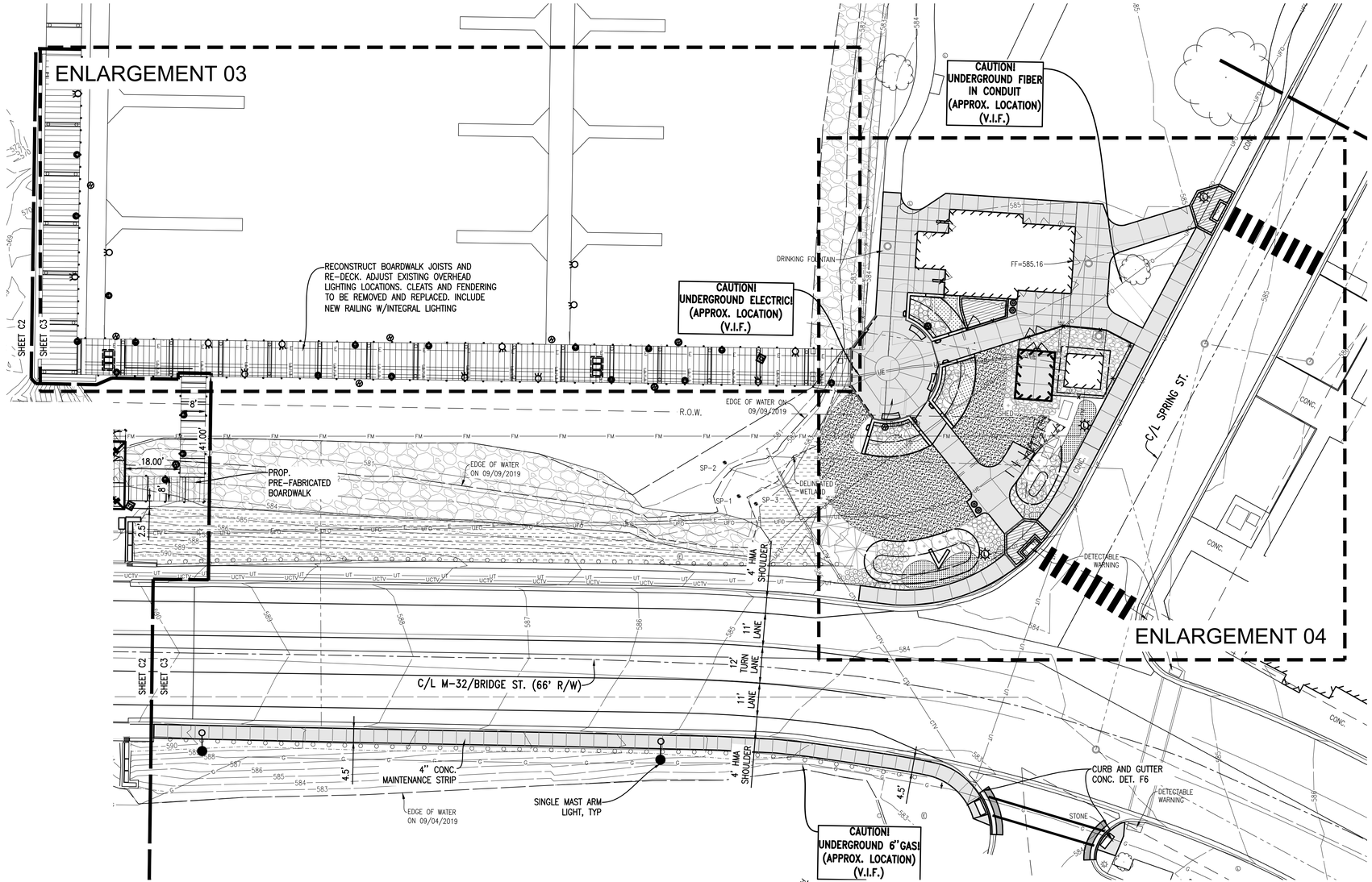


## LAYOUT PLAN: AREA 03

SCALE: 1" = 20'

SCALE 1" = 20'

0' 20' 40'

## General Legend

- PROJECT LIMITS
- EDGE OF WATER
- EX EDGE OF GRAVEL
- EX EDGE OF CONCRETE
- EX OVERHEAD ELECTRIC
- EX CONCRETE CURB
- EX WOOD BOLLARD
- EX CONIFEROUS TREE
- EX DECIDUOUS TREE
- PROP. EDGE OF ASPHALT
- PROP. EDGE OF CONCRETE
- EX. CONTOUR (576)
- PROP. CONTOUR (584)

## Surfacing Symbol Legend

- CONCRETE PAVING
- ASPHALT PAVING
- PERMEABLE PAVEMENT

REFER TO SITE FURNISHINGS SPEC 02960 AND CONSTRUCTION DETAILS FOR PRODUCT INFORMATION REGARDING ALL SITE FURNISHINGS. 1

Know what's below. Call before you dig.

THE LOCATION OF THE EXISTING UTILITIES, AS SHOWN ON THIS PLAN, ARE APPROXIMATE ONLY. IT SHALL BE THE RESPONSIBILITY OF THE CONTRACTOR TO VERIFY ACTUAL LOCATION AND DEPTH OF ALL EXISTING UTILITIES. THE OWNER AND THE SURVEYOR SHALL NOT BE RESPONSIBLE FOR ANY OMISSION OR VARIATION FROM THE LOCATION SHOWN. THE CONTRACTOR SHALL NOTIFY "MISS DIG" AT 1 (800) 482-7171 OR 811 THREE (3) WORKING DAYS PRIOR TO THE START OF CONSTRUCTION.


Gosling Czubak
engineering sciences, inc.
1280 Business Park Dr.
Traverse City, Michigan
231-946-9191 phone
info@goslingczubak.com
www.goslingczubak.com


CIVIL ENGINEERING
SURVEYING
ENVIRONMENTAL SERVICES
GEOTECHNICAL
CONSTRUCTION SERVICES
DRILLING
LANDSCAPE ARCHITECTURE

| No. | Date | Revision | By |
|---|---|---|---|
| 01 | 01-14-2020 | ADDENDUM 001 | DAW |

# LAYOUT PLAN - AREA 03
# JOINING JORDAN - PROJECT #MSC 218022-CPF
## EAST JORDAN DDA

| | |
|---|---|
| Date Issued: | 12/23/2019 |
| Date Surveyed: | 09/09/2019 |
| Designed By: | KDH |
| Drawn By: | DAW |
| Checked By: | KSK |
| Scale: | AS NOTED |

Original sheet size is 22x34

Location:
SECTION 23
T32N R07W
CHARLEVOIX COUNTY
MICHIGAN
---

Project Number:
2019510004.03

Sheet:
C3

P:\2019\510004 Gosling Czubak\CAD\2019510004-PS-Site Plan.dwg - Tab: C3 LAYOUT PLAN - AREA 03 Saved by: dwetz 1/15/2020 11:31 PM Plotted by: Dallas A. Wetz - PLA_ASLA 1/15/2020 11:38 PM

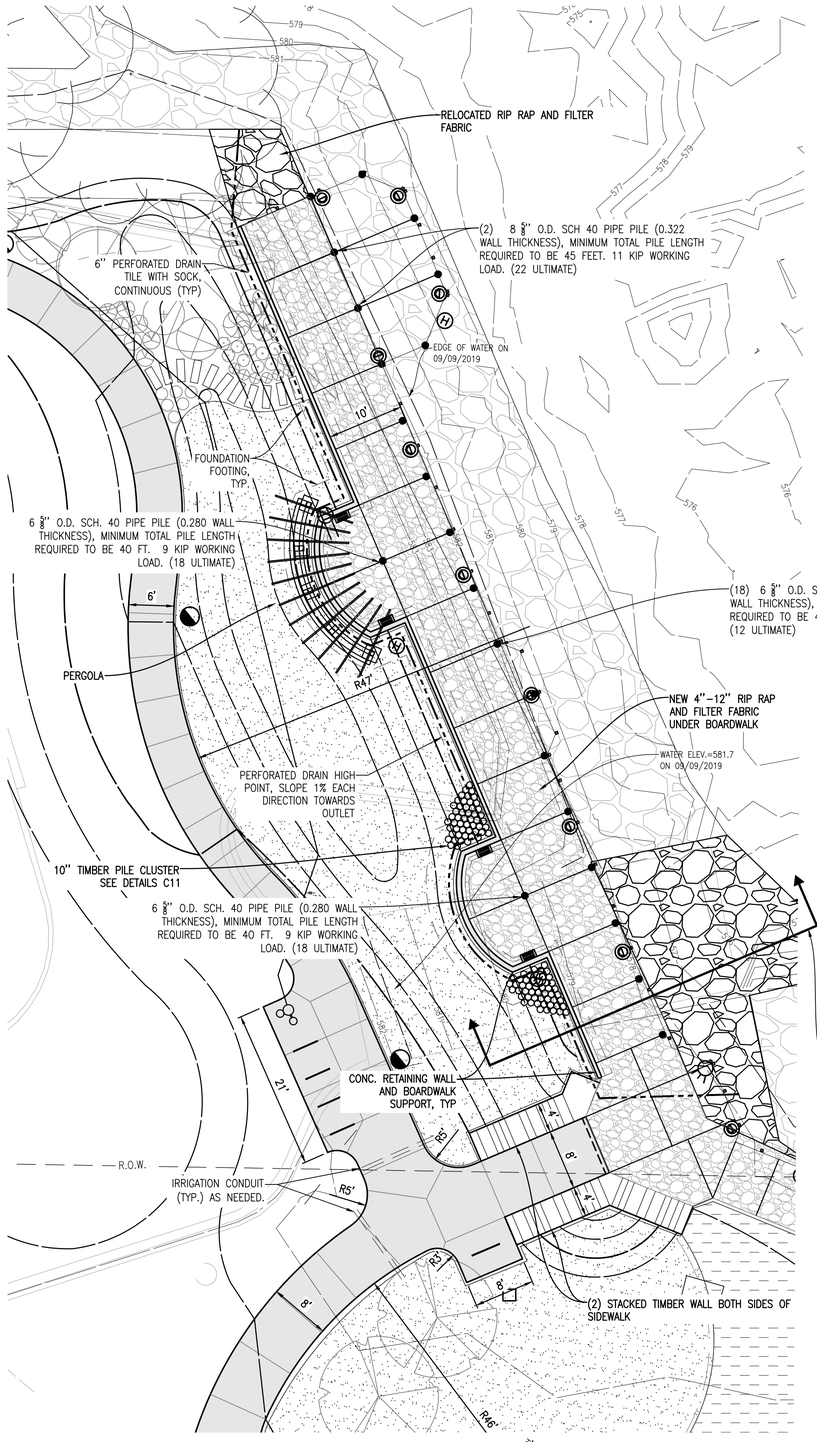


## ENLARGEMENT AREA 01: LAYOUT PLAN

SCALE: 1" = 10'

SCALE 1" = 10'

0' 10' 20'

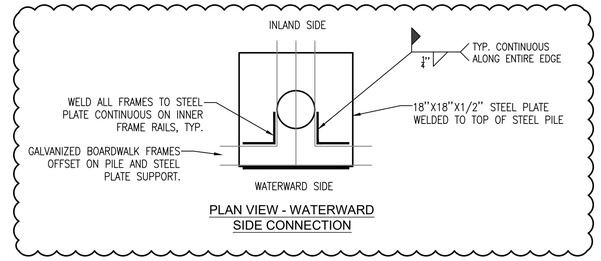


PLAN VIEW - WATERWARD SIDE CONNECTION

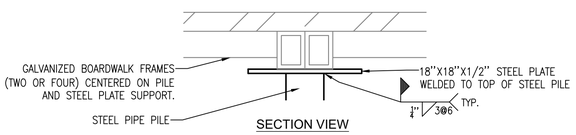


SECTION VIEW

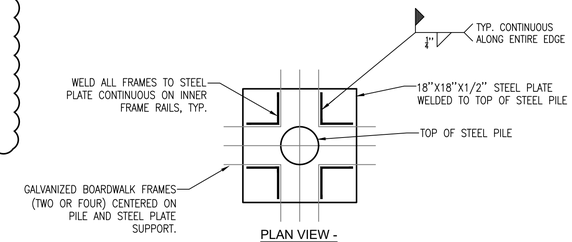


PLAN VIEW - 4 FRAME JUNCTION

## BOARDWALK FRAME TO PILE CONNECTION

SCALE: 1" = 1'-0"

## General Legend

- PROJECT LIMITS
- EDGE OF WATER
- EX EDGE OF GRAVEL
- EX EDGE OF CONCRETE
- EX OVERHEAD ELECTRIC
- EX CONCRETE CURB
- EX WOOD BOLLARD
- EX CONIFEROUS TREE
- EX DECIDUOUS TREE
- PROP. EDGE OF ASPHALT
- PROP. EDGE OF CONCRETE
- 576 EX. CONTOUR
- 584 PROP. CONTOUR

## Surfacing Symbol Legend

- CONCRETE PAVING
- ASPHALT PAVING

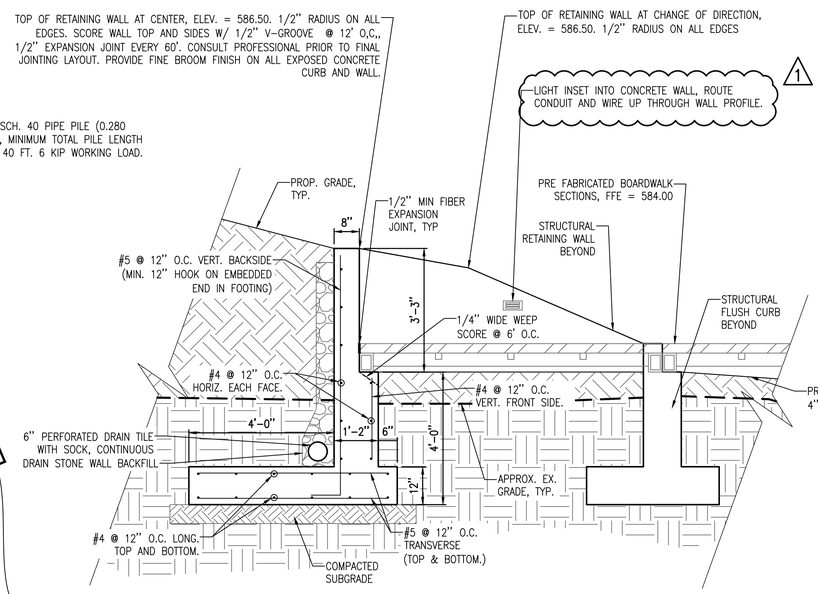


## STRUCTURAL RETAINING WALL

SCALE: 1/2" = 1'-0"

NOTE:
1. ALL EXPOSED SURFACES OF CONCRETE WALL AND CURB TO BE RUBBED FINISH SMOOTH WITH NO PITTING, VOIDS, FORM OR TIE MARKS, CORNERS, REVEALED IN FINISHED PRODUCT.
2. EXPOSED WALL SECTIONS SHALL BE SMOOTHED RADIUS AND BE RELIEVED OF ALL FORM JOINTING.
3. CONTRACTOR TO PROVIDE METHOD OF FINISHING FOR REVIEW AND APPROVAL BY THE OWNER.

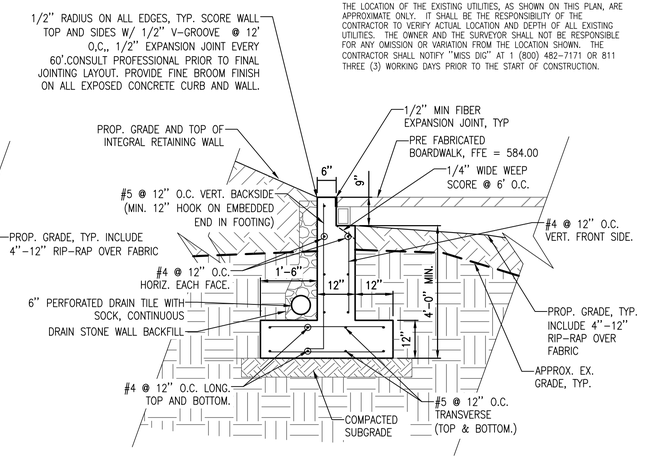


## STRUCTURAL FLUSH CURB

SCALE: 1/2" = 1'-0"

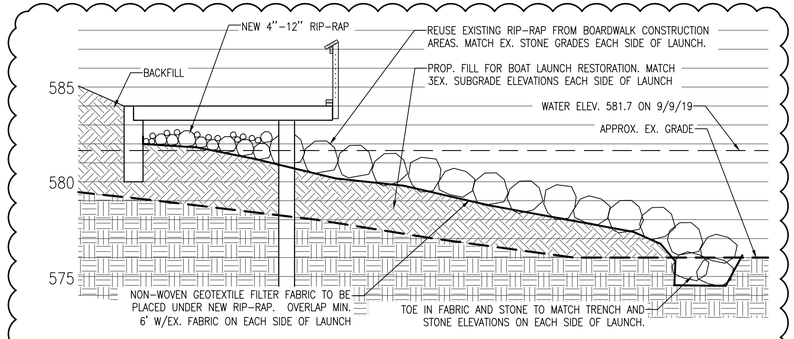


## BOAT LAUNCH RESTORATION SECTION

SCALE: 1/4" = 1'-0"

811 Know what's below. Call before you dig.

THE LOCATION OF THE EXISTING UTILITIES, AS SHOWN ON THIS PLAN, ARE APPROXIMATE ONLY. IT SHALL BE THE RESPONSIBILITY OF THE CONTRACTOR TO VERIFY ACTUAL LOCATION AND DEPTH OF ALL EXISTING UTILITIES. THE OWNER AND THE SURVEYOR SHALL NOT BE RESPONSIBLE FOR ANY OMISSION OR VARIATION FROM THE LOCATION SHOWN. THE CONTRACTOR SHALL NOTIFY "MISS DIG" AT 1 (800) 482-7171 OR 811 THREE (3) WORKING DAYS PRIOR TO THE START OF CONSTRUCTION.


GoslingCzubak engineering sciences, inc.
1280 Business Park Dr.
Traverse City, Michigan
231-946-9191 phone
info@goslingczubak.com
www.goslingczubak.com


CIVIL ENGINEERING
SURVEYING
ENVIRONMENTAL SERVICES
GEOTECHNICAL
CONSTRUCTION SERVICES
DRILLING
LANDSCAPE ARCHITECTURE

| No. | Date | Revision | By |
|---|---|---|---|
| 01 | 01-14-2020 | ADDENDUM 001 | DAW |

# ENLARGEMENT LAYOUT - AREA 01
# JOINING JORDAN - PROJECT #MSC 218022-CPF
## EAST JORDAN DDA

| | |
|---|---|
| Date Issued: | 12/23/2019 |
| Date Surveyed: | 09/09/2019 |
| Designed By: | KDH |
| Drawn By: | DAW |
| Checked By: | KSK |
| Scale: | AS NOTED |

Original sheet size is 22x34

Location:
SECTION 23
T32N R07W
CHARLEVOIX COUNTY
MICHIGAN

Project Number:
2019510004.03

Sheet:
C4

J:\2019\2019510004\Access data\CAD\2019510004-PSite Plan.dwg, Title C4 ENLARGEMENT LAYOUT - AREA 01, Saved by: dawitz, 1/13/2020 11:31 PM, Plotted by: Dawn A. Vintz, FLA, ASLA, 1/13/2020 11:38 PM

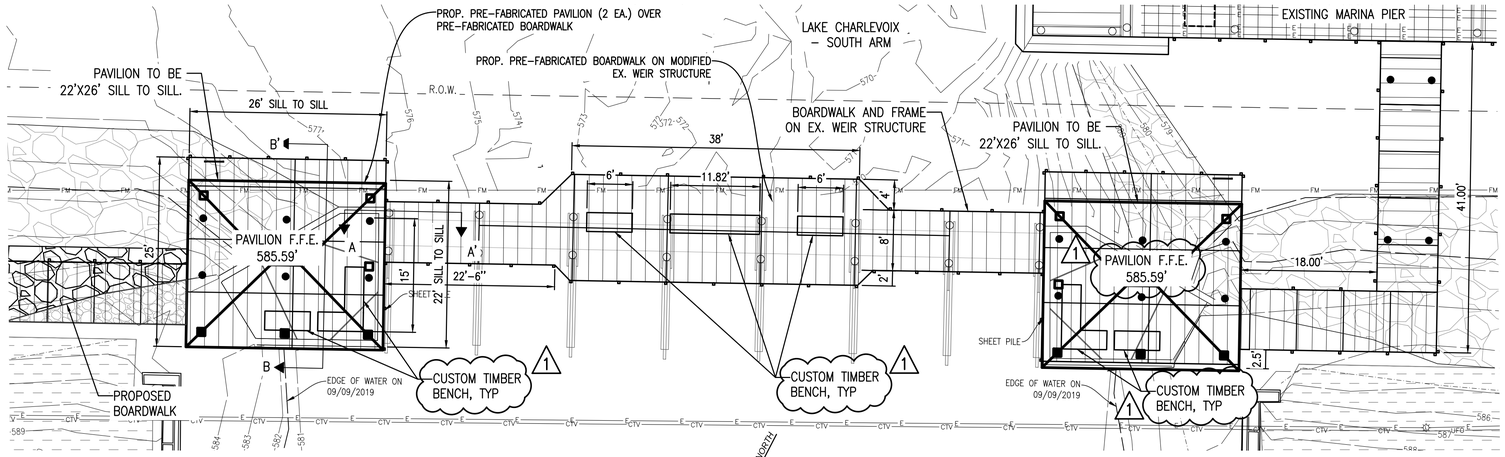


## LAYOUT ENLARGEMENT 02

SCALE: 1" = 10'

SCALE 1" = 10'

0' 10' 20'

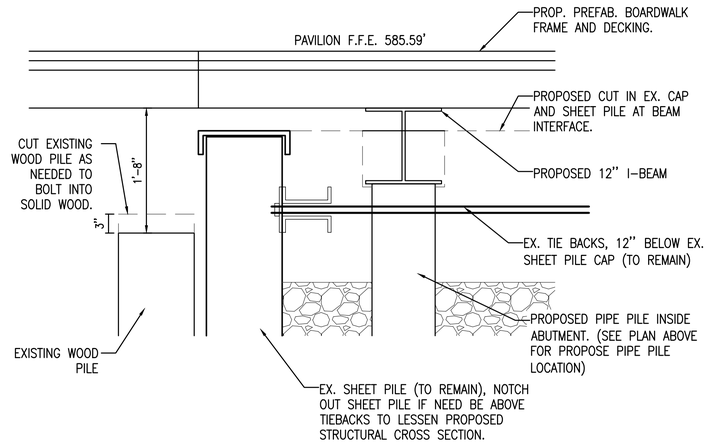


## PROPOSED WEIR SECTION A-A'

SCALE: 1" = 1'-0"

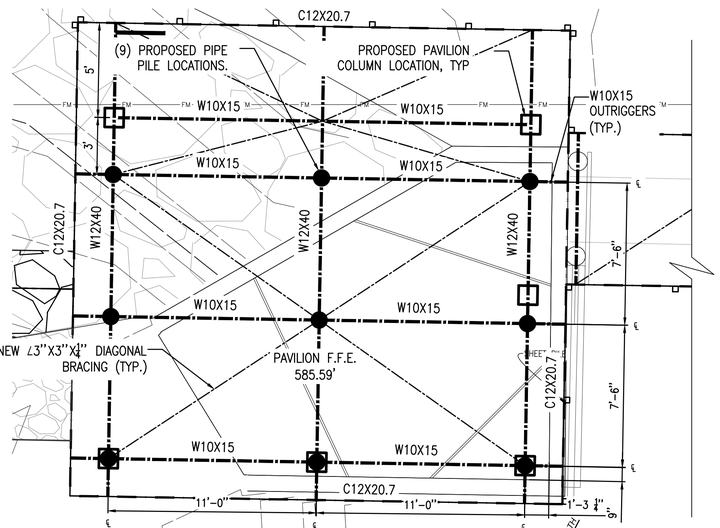


## WEST PAVILION ENLARGEMENT

SCALE: 1/4" = 1'-0"

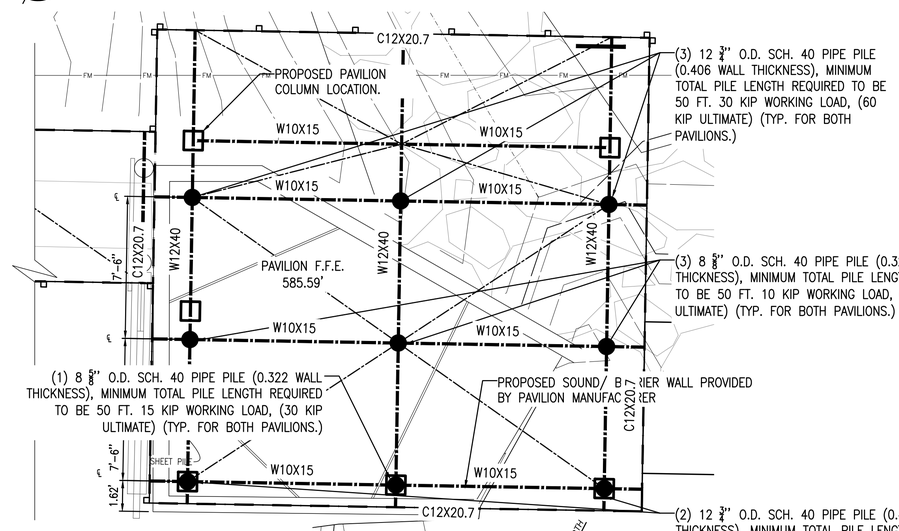


## EAST PAVILION ENLARGEMENT

SCALE: 1/4" = 1'-0"

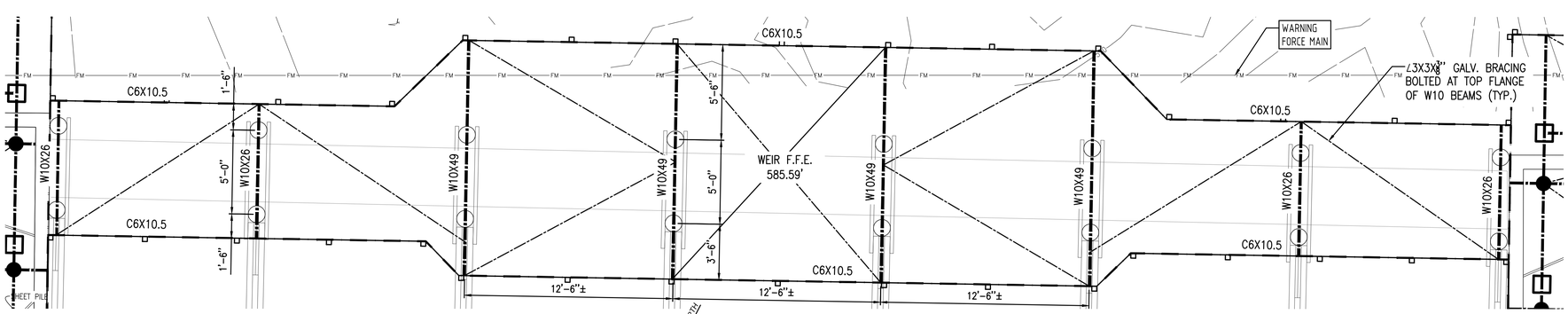


## WEIR LAYOUT ENLARGMENT

SCALE: 1/4" = 1'-0"

## General Legend

- PROJECT LIMITS
- EDGE OF WATER
- EX EDGE OF GRAVEL
- EX EDGE OF CONCRETE
- EX OVERHEAD ELECTRIC
- EX CONCRETE CURB
- EX WOOD BOLLARD
- EX CONIFEROUS TREE
- EX DECIDUOUS TREE
- PROP. EDGE OF ASPHALT
- PROP. EDGE OF CONCRETE
- 576 EX. CONTOUR
- 584 PROP. CONTOUR

## Surfacing Symbol Legend

- CONCRETE PAVING
- ASPHALT PAVING

811 Know what's below. Call before you dig.

THE LOCATION OF THE EXISTING UTILITIES, AS SHOWN ON THIS PLAN, ARE APPROXIMATE ONLY. IT SHALL BE THE RESPONSIBILITY OF THE CONTRACTOR TO VERIFY ACTUAL LOCATION AND DEPTH OF ALL EXISTING UTILITIES. THE OWNER AND THE SURVEYOR SHALL NOT BE RESPONSIBLE FOR ANY OMISSION OR VARIATION FROM THE LOCATION SHOWN. THE CONTRACTOR SHALL NOTIFY "MISS DIG" AT 1 (800) 482-7171 OR 811 THREE (3) WORKING DAYS PRIOR TO THE START OF CONSTRUCTION.


GoslingCzubak engineering sciences, inc.
1280 Business Park Dr.
Traverse City, Michigan
231-946-9191 phone
info@goslingczubak.com
www.goslingczubak.com

CIVIL ENGINEERING
SURVEYING
ENVIRONMENTAL SERVICES
GEOTECHNICAL
CONSTRUCTION SERVICES
DRILLING
LANDSCAPE ARCHITECTURE

TRISON Engineering Group, Inc.
112 W. Fourteenth Street,
Traverse City, MI 49684
Phone: 231.932.9177
Fax: 231.932.0179


| No. | Date | Revision | By |
|---|---|---|---|
| 01 | 01-14-2020 | ADDENDUM 001 | DAW |

# ENLARGEMENT LAYOUT - AREA 02
# JOINING JORDAN - PROJECT #MSC 218022-CPF
## EAST JORDAN DDA

| | |
|---|---|
| Date Issued: | 12/23/2019 |
| Date Surveyed: | 09/09/2019 |
| Designed By: | KDH |
| Drawn By: | DAW |
| Checked By: | KSK |
| Scale: | AS NOTED |

Original sheet size is 22x34

Location:
SECTION 23
T32N R07W
CHARLEVOIX COUNTY
MICHIGAN

Project Number:
2019510004.03

Sheet:
C5

P:\2019510004 Orchards-EastJordan\DD\2019510004-PS-Site Plan.dwg - Tab: C5 ENLARGEMENT LAYOUT - AREA 02 - Saved by: dawitz, 1/13/2020 11:39 PM - Plotted by: Dallas A. Witz, PLA ASLA 1/13/2020 11:39 PM

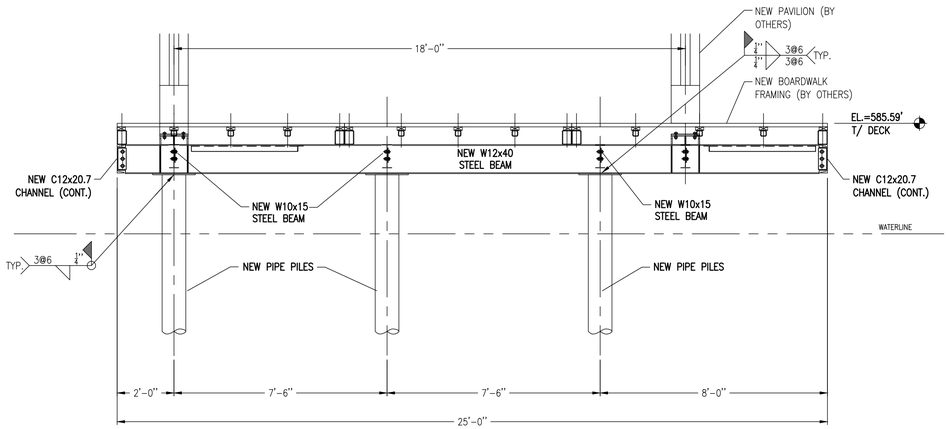


## SECTION A-A'

SCALE: 3/8" = 1'-0"

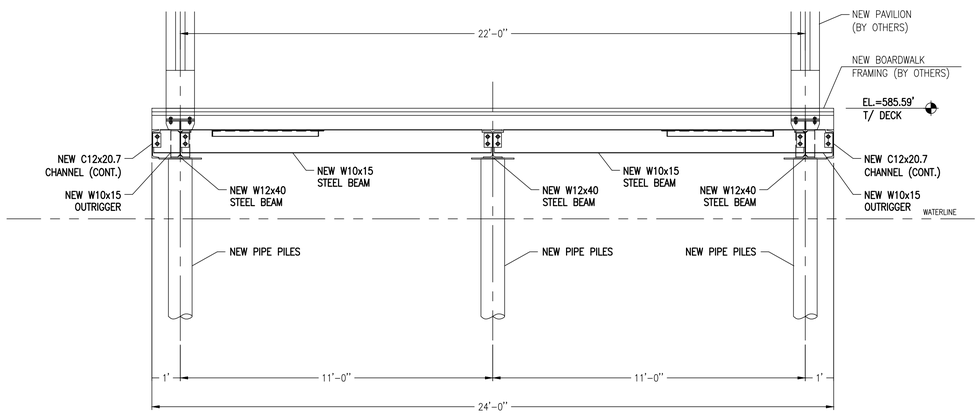


## SECTION B-B'

SCALE: 3/8" = 1'-0"

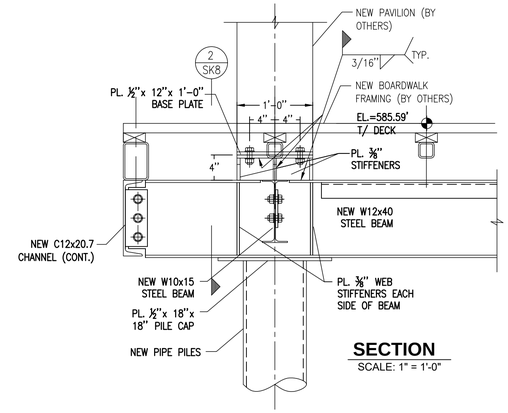


## SECTION

SCALE: 1" = 1'-0"

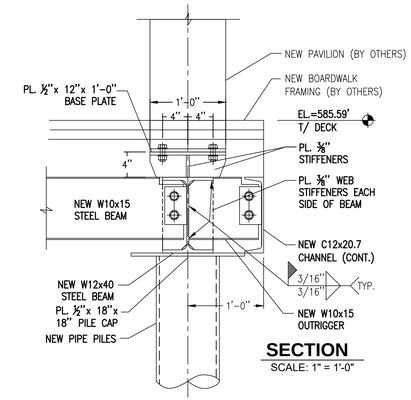


## SECTION

SCALE: 1" = 1'-0"

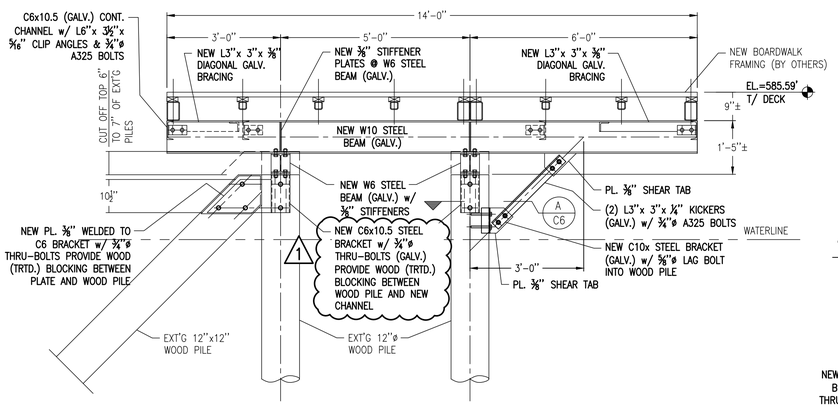


## SECTION C-C'

SCALE: 1/2" = 1'-0"

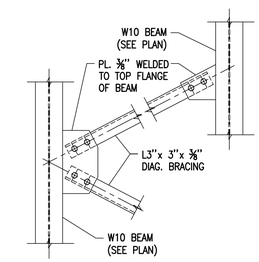


## TYP. BRACING CONNECTION DETAIL

SCALE: 3/4" = 1'-0"

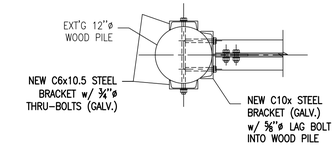


## SECTION

SCALE: 3/4" = 1'-0" A C6

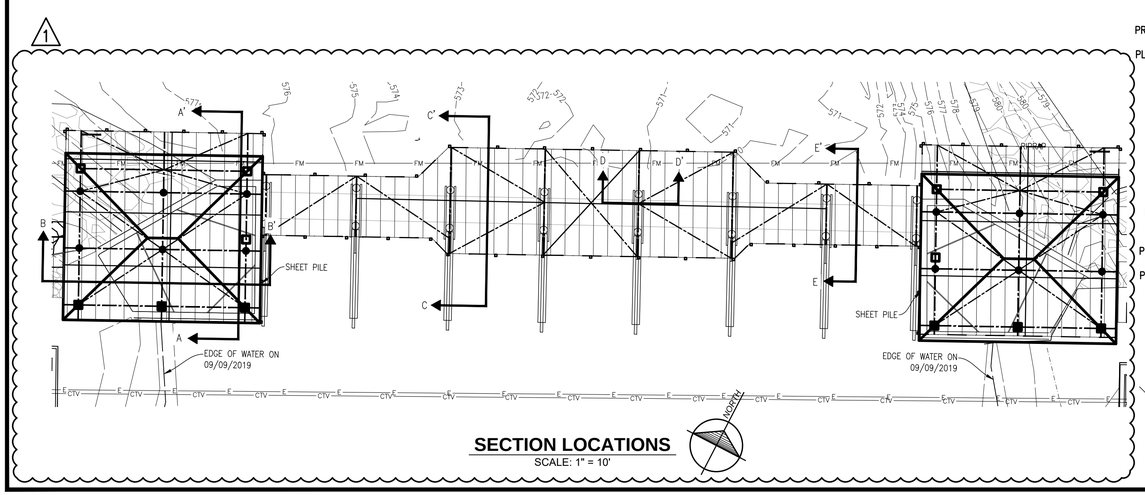


## SECTION LOCATIONS

SCALE: 1" = 10'

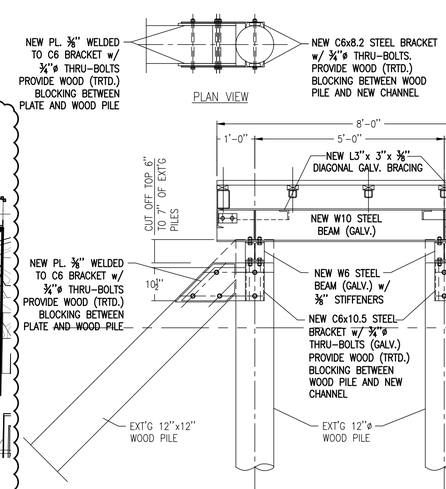


## SECTION E-E'

SCALE: 1/2" = 1'-0"

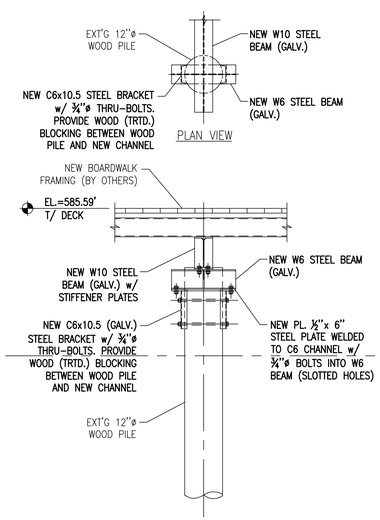


## SECTION D-D'

SCALE: 1/2" = 1'-0"


GoslingCzubak
engineering sciences, inc.
1280 Business Park Dr.
Traverse City, Michigan
231-946-9191 phone
info@goslingczubak.com
www.goslingczubak.com

CIVIL ENGINEERING
SURVEYING
ENVIRONMENTAL SERVICES
GEOTECHNICAL
CONSTRUCTION SERVICES
DRILLING
LANDSCAPE ARCHITECTURE

TRISON
Engineering Group, Inc.
112 W. Fourteenth Street,
Traverse City, MI 49684
Phone: 231.932.9177
Fax: 231.932.0179


| No. | Date | Revision | By |
|---|---|---|---|
| 01 | 01-14-2020 | ADDENDUM 001 | DAW |

# PAVILION & WEIR PLATFORM DETAILS
# JOINING JORDAN - PROJECT #MSC 218022-CPF
## EAST JORDAN DDA

| | |
|---|---|
| Date Issued: | 12/23/2019 |
| Date Surveyed: | 09/09/2019 |
| Designed By: | KDH |
| Drawn By: | DAW |
| Checked By: | KSK |
| Scale: | AS NOTED |

Original sheet size is 22x34

Location:
SECTION 23
T32N R07W
CHARLEVOIX COUNTY
MICHIGAN
---

Project Number:
2019510004.03

Sheet:
**C6**

P:\2019\10004.00\cad-bim\CD\20190100041PS-Site Plan.dwg - Tab: C6 PAVILION & WEIR PLATFORM DETAILS Saved by: daw(w 1/13/2020 1:13 PM Plotted by: Dallas A. Vinz; PLA, ASLA 1/13/2020 1:13 PM

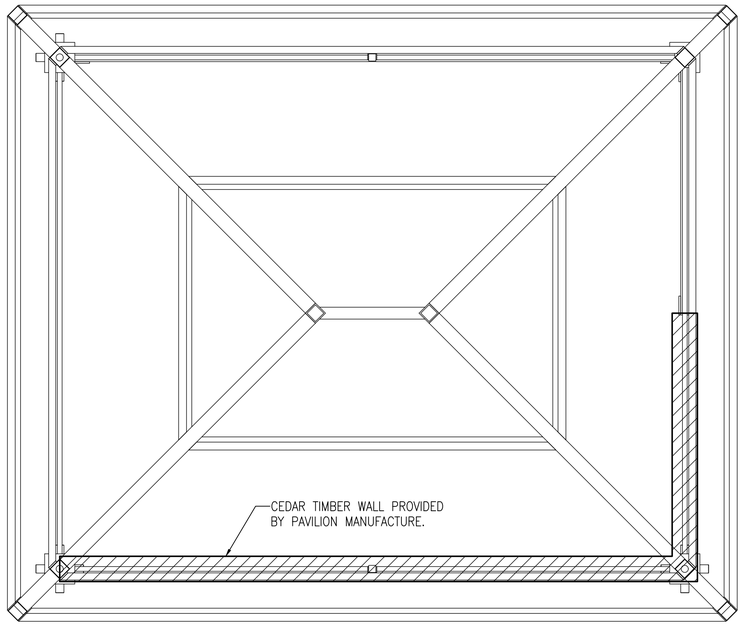


**PAVILION PLAN**
SCALE: 3/4" = 1'

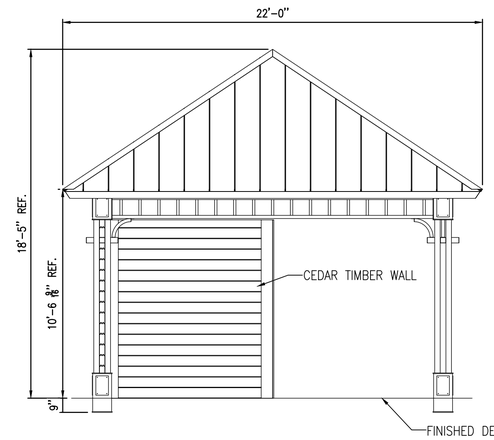


**PAVILION SECTION A-A'**
SCALE: 1/4" = 1'

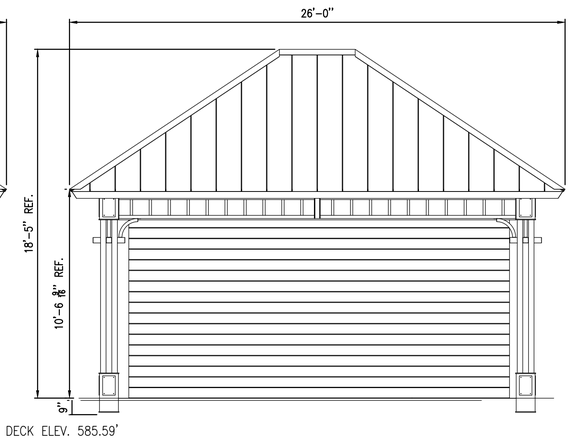


**PAVILION SECTION B-B'**
SCALE: 1/4" = 1'

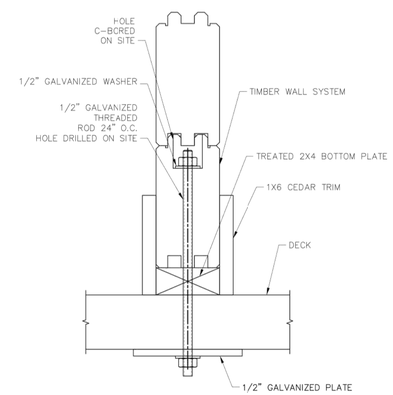


**WALL TO DECK CONNECTION**
SCALE: NTS

NOTES:

1. PREFABRICATED PAVILION TO BE MANUFACTURED BY ICON SHELTER SYSTEMS, INC. HOLLAND, MI.
2. PROVIDE PAVILION SHOP DRAWINGS FOR REVIEW AND APPROVAL BY THE PROFESSIONAL.


GoslingCzubak
engineering sciences, inc.
1280 Business Park Dr.
Traverse City, Michigan
231-946-9191 phone
info@goslingczubak.com
www.goslingczubak.com


CIVIL ENGINEERING
SURVEYING
ENVIRONMENTAL SERVICES
GEOTECHNICAL
CONSTRUCTION SERVICES
DRILLING
LANDSCAPE ARCHITECTURE

| No. | Date | Revision | By |
|---|---|---|---|

# PAVILION LAYOUT
# JOINING JORDAN - PROJECT #MSC 218022-CPF
## EAST JORDAN DDA

| | |
|---|---|
| Date Issued: | 12/23/2019 |
| Date Surveyed: | 09/09/2019 |
| Designed By: | KDH |
| Drawn By: | DAW |
| Checked By: | KSK |
| Scale: | AS NOTED |

Original sheet size is 22x34

Location:
SECTION 23
T32N R07W
CHARLEVOIX COUNTY
MICHIGAN
---

Project Number:
2019510004.03

Sheet:
C7

I:\2019\10004 Gosling\data\CSD\2019510004-PS-Site Plan.dwg Tab: C7 PAVILION LAYOUT Saved by: dawtz 11/12/2020 11:31 PM Plotted by: Dallas A. Wirtz, PLA ASLA 11/12/2020 11:39 PM

## General Legend

- PROJECT LIMITS
- EDGE OF WATER
- EX EDGE OF GRAVEL
- EX EDGE OF CONCRETE
- EX OVERHEAD ELECTRIC
- EX CONCRETE CURB
- EX WOOD BOLLARD
- EX CONIFEROUS TREE
- EX DECIDUOUS TREE
- PROP. EDGE OF ASPHALT
- PROP. EDGE OF CONCRETE
- 576 EX. CONTOUR
- 584 PROP. CONTOUR
- PICNIC TABLE
- TRASH RECEPTACLE

## Surfacing Symbol Legend

- CONCRETE PAVING
- ASPHALT PAVING

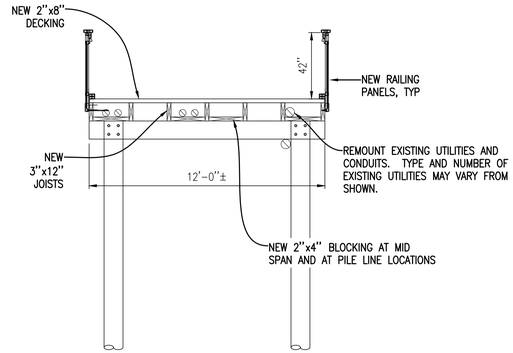


### PIER SECTION A-A
SCALE: 1/4" = 1'

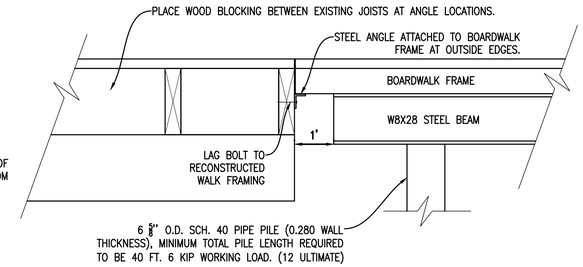


### BRIDGE/ PIER CONNECTION DETAIL
SCALE: 1" = 1'-0"

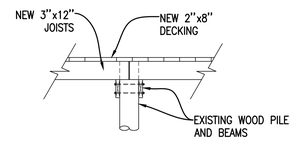


### EXISTING PIER SECTION
SCALE: 1/4" = 1'

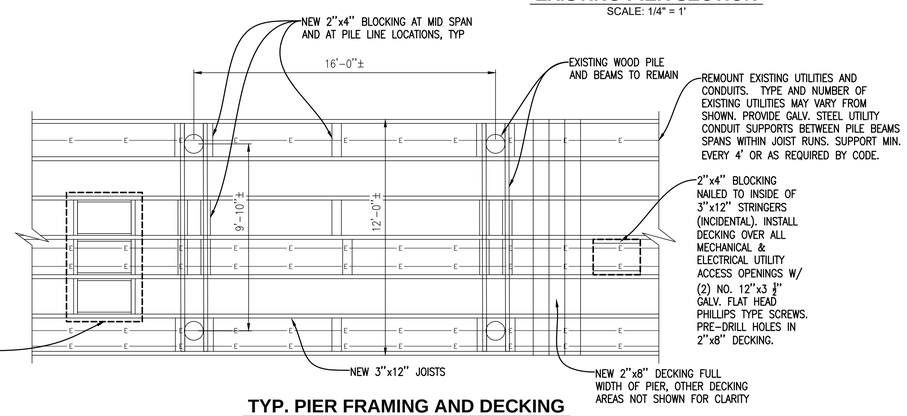


### TYP. PIER FRAMING AND DECKING
SCALE: 1/4" = 1'

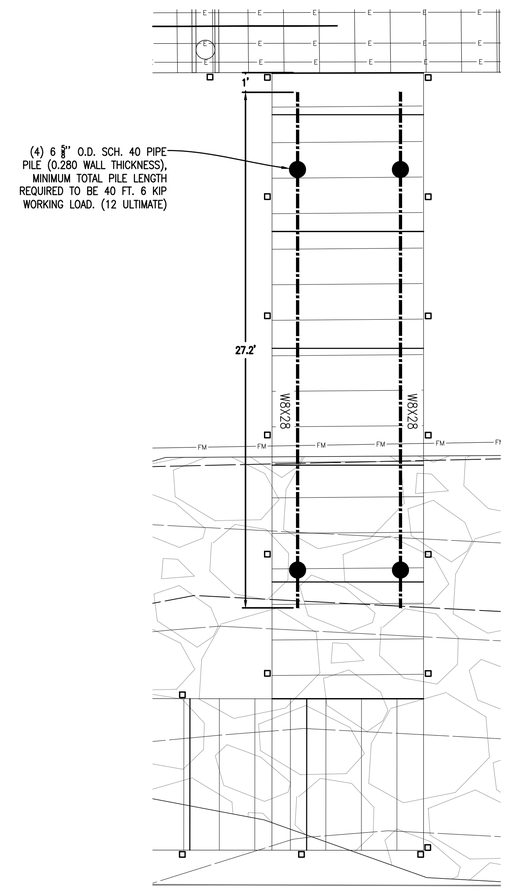


### CONNECTOR BRIDGE LAYOUT
SCALE: 1/4" = 1'

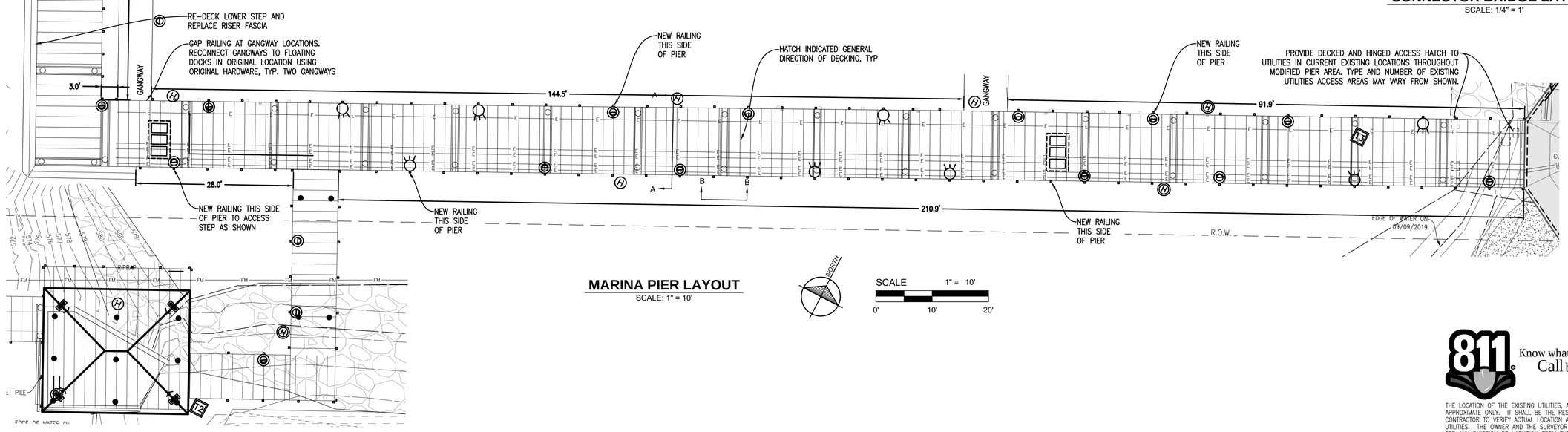


### MARINA PIER LAYOUT
SCALE: 1" = 10'

NORTH

SCALE 1" = 10'
0' 10' 20'

Know what's below. Call before you dig.

THE LOCATION OF THE EXISTING UTILITIES, AS SHOWN ON THIS PLAN, ARE APPROXIMATE ONLY. IT SHALL BE THE RESPONSIBILITY OF THE CONTRACTOR TO VERIFY ACTUAL LOCATION AND DEPTH OF ALL EXISTING UTILITIES. THE OWNER AND THE SURVEYOR SHALL NOT BE RESPONSIBLE FOR ANY OMISSION OR VARIATION FROM THE LOCATION SHOWN. THE CONTRACTOR SHALL NOTIFY "MISS DIG" AT 1 (800) 482-7171 OR 811 THREE (3) WORKING DAYS PRIOR TO THE START OF CONSTRUCTION.


Gosling Czubak
engineering sciences, inc.
1280 Business Park Dr.
Traverse City, Michigan
231-946-9191 phone
info@goslingczubak.com
www.goslingczubak.com


CIVIL ENGINEERING
SURVEYING
ENVIRONMENTAL SERVICES
GEOTECHNICAL
CONSTRUCTION SERVICES
DRILLING
LANDSCAPE ARCHITECTURE

| No. | Date | Revision | By |
|---|---|---|---|

# ENLARGEMENT LAYOUT - AREA 03
# JOINING JORDAN - PROJECT #MSC 218022-CPF
## EAST JORDAN DDA

| | |
|---|---|
| Date Issued: | 12/23/2019 |
| Date Surveyed: | 09/09/2019 |
| Designed By: | KDH |
| Drawn By: | DAW |
| Checked By: | KSK |
| Scale: | AS NOTED |

Original sheet size is 22x34

Location:
SECTION 23
T32N R07W
CHARLEVOIX COUNTY
MICHIGAN
---

Project Number:
2019510004.03

Sheet:
**C8**

P:\2019\510004\Drawds-Sites\CD\2019510004-PS-Site Plan.dwg Tab: C8 ENLARGEMENT LAYOUT - AREA 03 Saved by: dawritz 1/13/2020 11:31 PM Plotted by: Dallas A Witte, PLA, ASLA 1/13/2020 11:33 PM

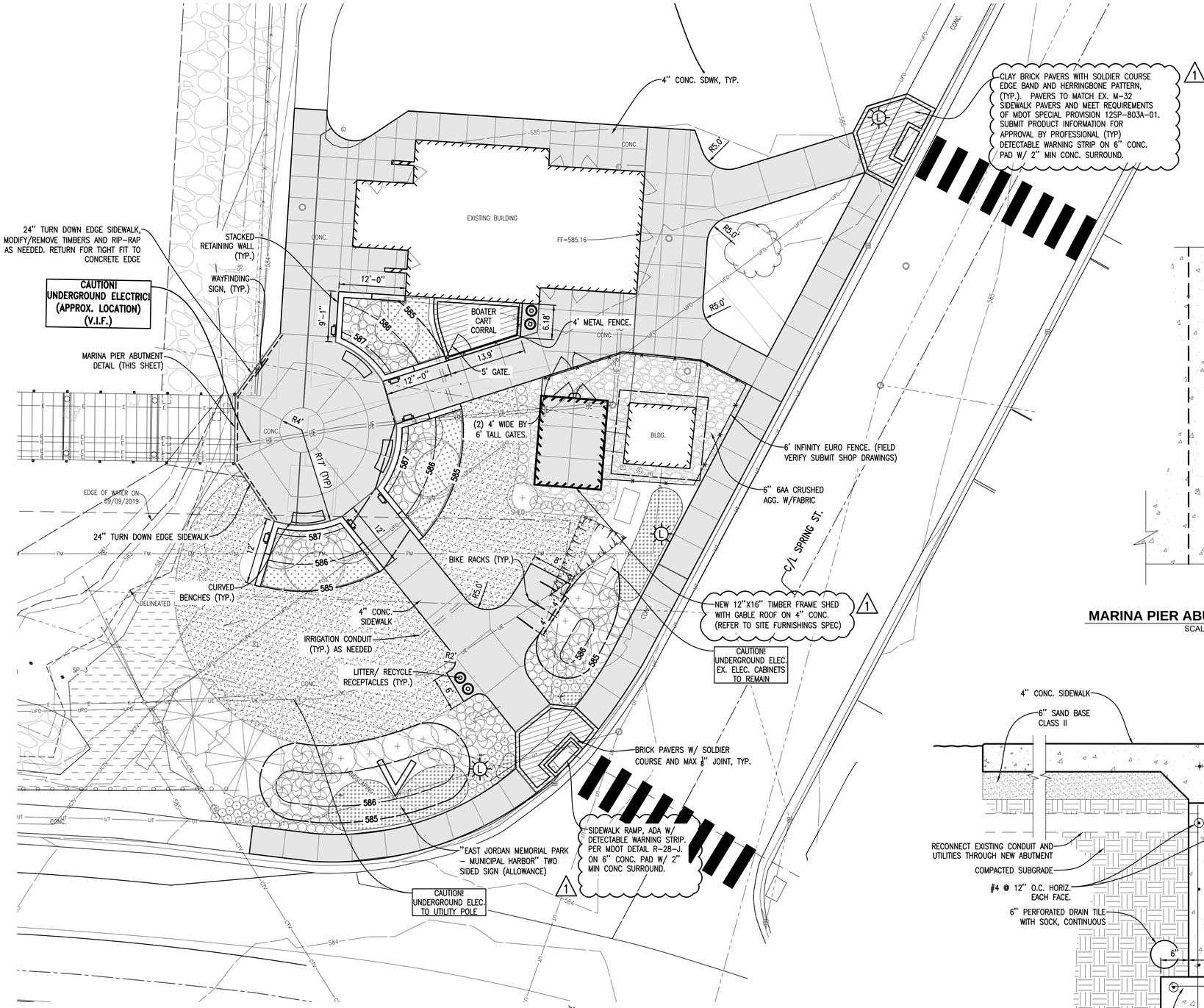


## LAYOUT ENLARGEMENT - AREA 05

SCALE: 1" = 10'

SCALE 1" = 10'

0' 10' 20'

## Surfacing Symbol Legend

- CONCRETE PAVING
- ASPHALT PAVING
- CLAY BRICK PAVERS

## General Legend

- PROJECT LIMITS
- EDGE OF WATER
- EX EDGE OF GRAVEL
- EX EDGE OF CONCRETE
- EX OVERHEAD ELECTRIC
- EX CONCRETE CURB
- EX WOOD BOLLARD
- EX CONIFEROUS TREE
- EX DECIDUOUS TREE
- PROP. EDGE OF ASPHALT
- PROP. EDGE OF CONCRETE
- EX. CONTOUR
- PROP. CONTOUR

1 REFER TO SITE FURNISHINGS SPEC 02960 FOR PRODUCT INFORMATION REGARDING ALL SITE FURNISHINGS.

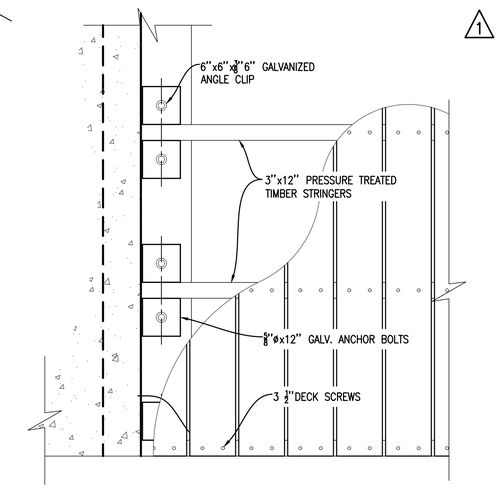


## MARINA PIER ABUTMENT PLAN VIEW

SCALE: 1/2" = 1'

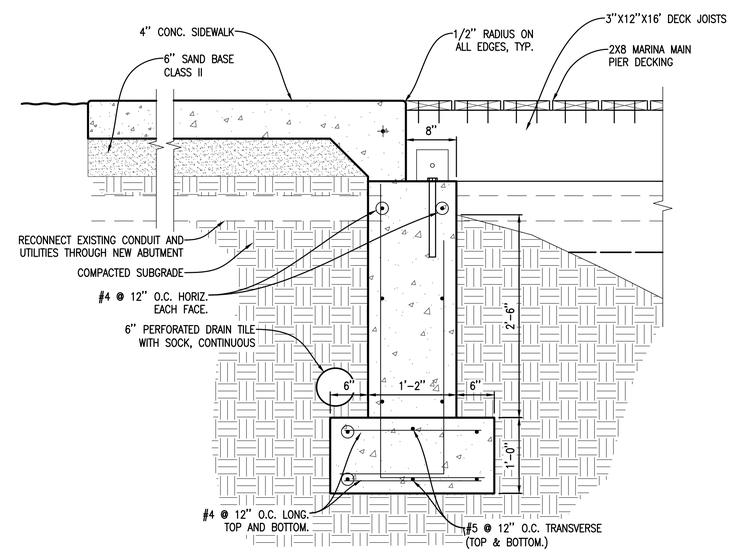


## MARINA PIER ABUTMENT DETAIL

SCALE: 1" = 1'-0"

811 Know what's below. Call before you dig.

THE LOCATION OF THE EXISTING UTILITIES, AS SHOWN ON THIS PLAN, ARE APPROXIMATE ONLY. IT SHALL BE THE RESPONSIBILITY OF THE CONTRACTOR TO VERIFY ACTUAL LOCATION AND DEPTH OF ALL EXISTING UTILITIES. THE OWNER AND THE SURVEYOR SHALL NOT BE RESPONSIBLE FOR ANY OMISSION OR VARIATION FROM THE LOCATION SHOWN. THE CONTRACTOR SHALL NOTIFY "MISS DIG" AT 1 (800) 482-7171 OR 811 THREE (3) WORKING DAYS PRIOR TO THE START OF CONSTRUCTION.

1 NOTES, DIMENSION, AND OTHER CHANGES HAVE BEEN MADE ON THIS SHEET.


GoslingCzubak engineering sciences, inc.
1280 Business Park Dr.
Traverse City, Michigan
231-946-9191 phone
info@goslingczubak.com
www.goslingczubak.com


CIVIL ENGINEERING
SURVEYING
ENVIRONMENTAL SERVICES
GEOTECHNICAL
CONSTRUCTION SERVICES
DRILLING
LANDSCAPE ARCHITECTURE

| No. | Date | Revision | By |
|---|---|---|---|
| 01 | 01-14-2020 | ADDENDUM 001 | DAW |

# ENLARGEMENT LAYOUT - AREA 04
# JOINING JORDAN - PROJECT #MSC 218022-CPF
## EAST JORDAN DDA

| | |
|---|---|
| Date Issued: | 12/23/2019 |
| Date Surveyed: | 09/09/2019 |
| Designed By: | KDH |
| Drawn By: | DAW |
| Checked By: | KSK |
| Scale: | AS NOTED |

Original sheet size is 22x34

Location:
SECTION 23
T32N R07W
CHARLEVOIX COUNTY
MICHIGAN

Project Number:
2019510004.03

Sheet:
C9

P:\2019510004 GOSLING\data\CSD\2019510004-Site Plan.dwg Tab:C9 ENLARGEMENT LAYOUT - AREA 04 Saved by dawitz 1/13/2020 11:52 PM Plotted by Dallas A. Wirtz, R.A. KSA 1/13/2020 11:53 PM

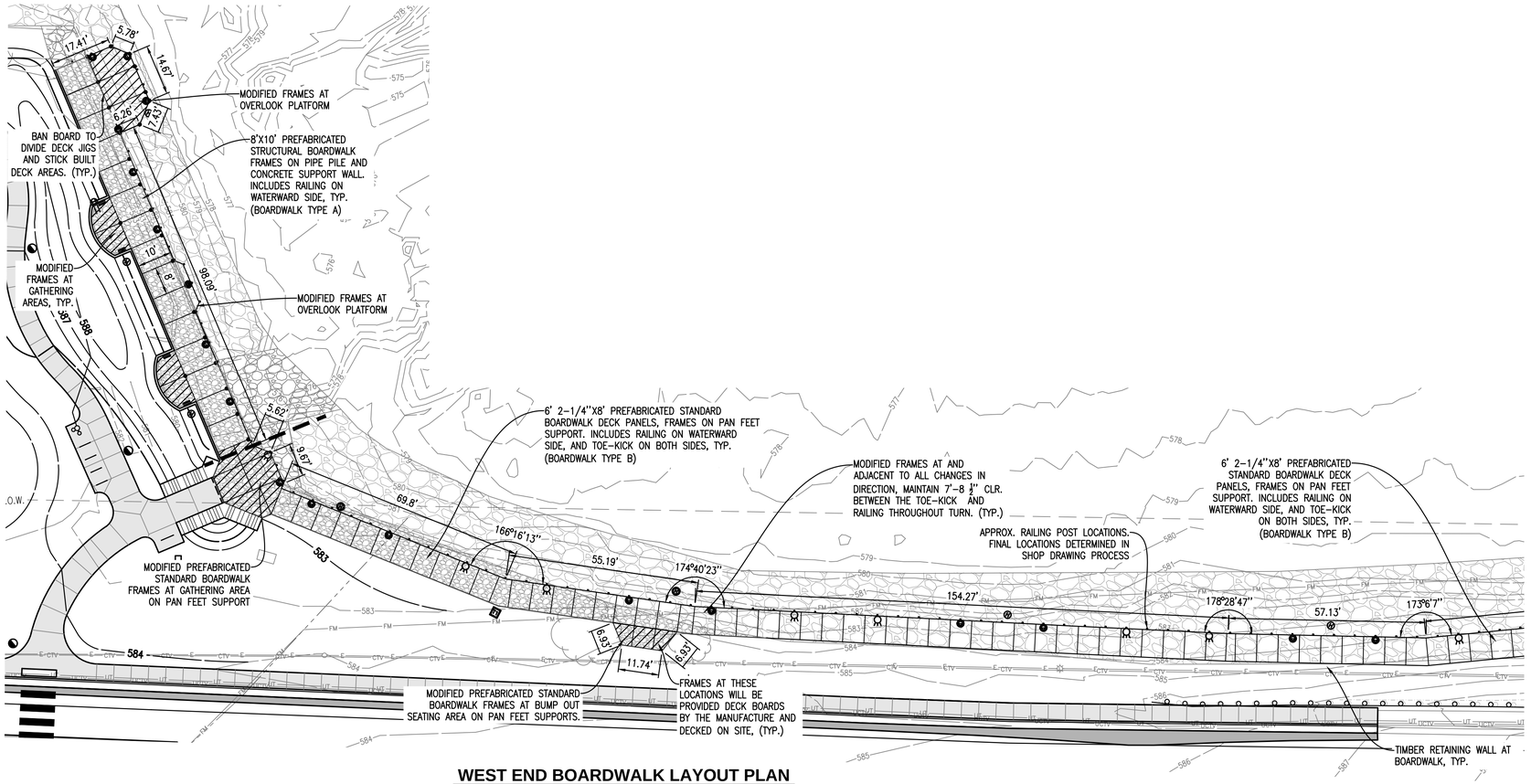


## WEST END BOARDWALK LAYOUT PLAN

SCALE: 1" = 20'

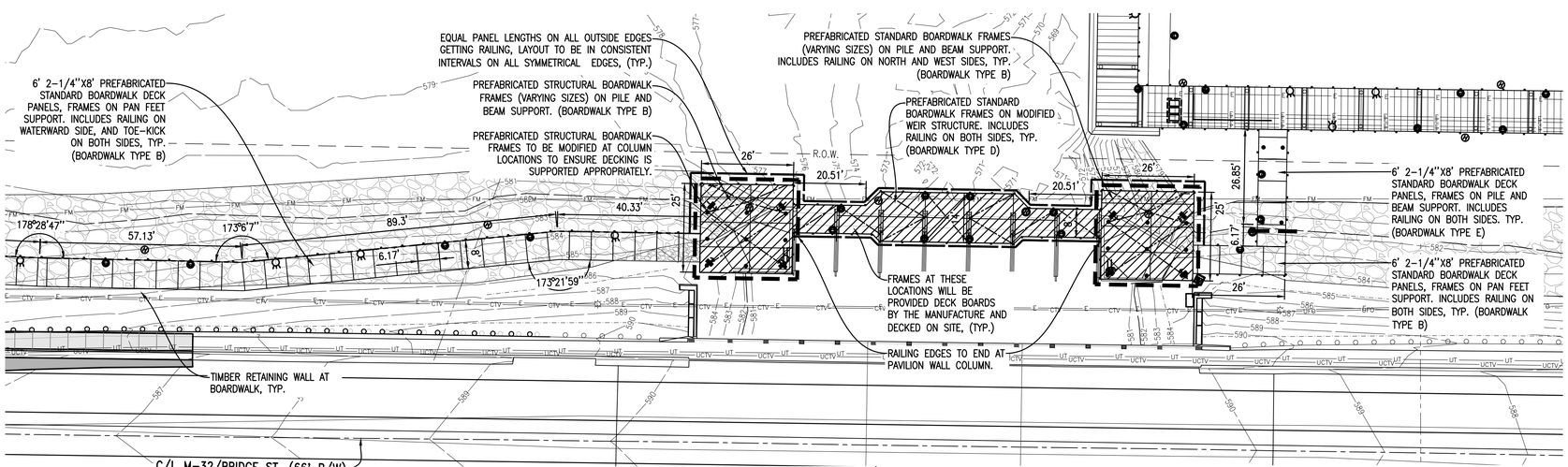


## EAST END BOARDWALK LAYOUT PLAN

SCALE: 1" = 20'

NORTH

SCALE 1" = 20'

0' 20' 40'

## General Legend

- PROJECT LIMITS
- EDGE OF WATER
- EX EDGE OF GRAVEL
- EX EDGE OF CONCRETE
- EX OVERHEAD ELECTRIC
- EX CONCRETE CURB
- EX WOOD BOLLARD
- EX CONIFEROUS TREE
- EX DECIDUOUS TREE
- PROP. EDGE OF ASPHALT
- PROP. EDGE OF CONCRETE
- EX. CONTOUR
- PROP. CONTOUR

## Surfacing Symbol Legend

- CONCRETE PAVING
- ASPHALT PAVING

NOTES:

1. BOARDWALK SYSTEM TO BE SUPPLIED BY WICKCRAFT BOARDWALKS, MADISON, WI
2. PROVIDE BOARDWALK SYSTEM SHOP DRAWINGS FOR REVIEW AND APPROVAL BY THE PROFESSIONAL. FINAL BOARDWALK SYSTEM FRAMING, RAILING AND LAYOUT WILL BE DETERMINED BY APPROVED SHOP DRAWINGS.
3. STRUCTURAL AND STANDARD FRAMES WILL BE PROVIDED BY MANUFACTURER WITH PRE-ASSEMBLED DECK PANELS FOR ALL AREAS EXCEPT WHERE INDICATED ON THIS PLAN. PRE-DECK PANELS AND FRAMES ARE DELIVERED SEPARATE AND ARE ASSEMBLED IN THE FIELD. OTHER AREAS WILL BE DECKED IN THE FIELD USING BOARDWALK MANUFACTURER SUPPLIED LUMBER.
4. BAN BOARDS SEPARATING MAIN BOARDWALK ALIGNMENT FROM INDIVIDUALLY DECKED AREAS AND BUMPOUTS WILL APPLY.
5. AREAS AT THE PAVILION WILL BE DECKED WITH STAGGERED JOINTS. FRAMES AND DECKING TO BE MODIFIED AROUND PAVILION POSTS FOR TIGHT JOINTED FIT.

811 Know what's below. Call before you dig.

THE LOCATION OF THE EXISTING UTILITIES, AS SHOWN ON THIS PLAN, ARE APPROXIMATE ONLY. IT SHALL BE THE RESPONSIBILITY OF THE CONTRACTOR TO VERIFY ACTUAL LOCATION AND DEPTH OF ALL EXISTING UTILITIES. THE OWNER AND THE SURVEYOR SHALL NOT BE RESPONSIBLE FOR ANY OMISSION OR VARIATION FROM THE LOCATION SHOWN. THE CONTRACTOR SHALL NOTIFY "MISS DIG" AT 1 (800) 482-7171 OR 811 THREE (3) WORKING DAYS PRIOR TO THE START OF CONSTRUCTION.


Gosling Czubak
engineering sciences, inc.
1280 Business Park Dr.
Traverse City, Michigan
231-946-9191 phone
info@goslingczubak.com
www.goslingczubak.com


CIVIL ENGINEERING
SURVEYING
ENVIRONMENTAL SERVICES
GEOTECHNICAL
CONSTRUCTION SERVICES
DRILLING
LANDSCAPE ARCHITECTURE

| No. | Date | Revision | By |
|---|---|---|---|

# BOARDWALK LAYOUT PLAN
# JOINING JORDAN - PROJECT #MSC 218022-CPF
## EAST JORDAN DDA

| | |
|---|---|
| Date Issued: | 12/23/2019 |
| Date Surveyed: | 09/09/2019 |
| Designed By: | KDH |
| Drawn By: | DAW |
| Checked By: | KSK |
| Scale: | AS NOTED |

Original sheet size is 22x34

Location:
SECTION 23
T32N R07W
CHARLEVOIX COUNTY
MICHIGAN
---

Project Number:
2019510004.03

Sheet:
C10

J:\2019\10004.03\acad-dwg\CD\2019510004-PS-Boardwalk Layout.dwg, Tab: C10 BOARDWALK LAYOUT PLAN, Saved by: dawtrz 1/7/2020 3:25 PM, Plotted by: Dallas A. Wirtz - PLA, ASLA 1/7/2020 11:39 PM

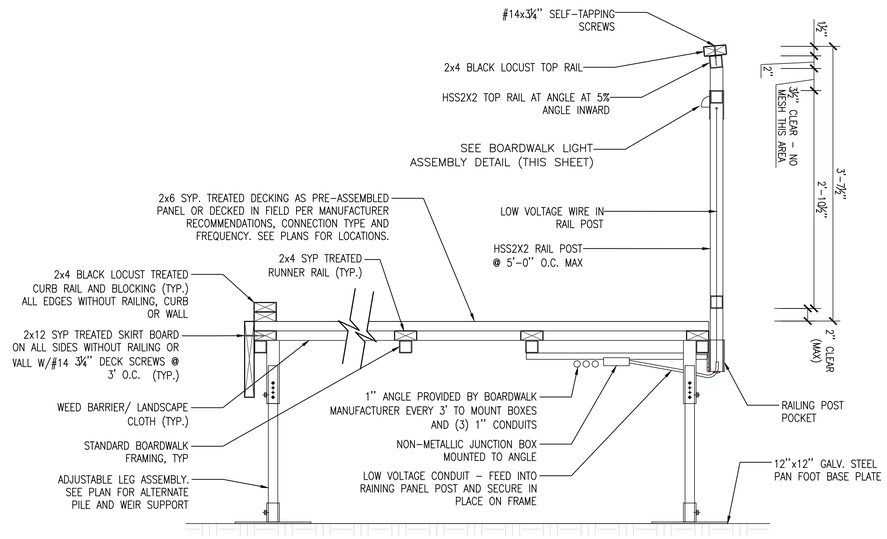


## TYPICAL BOARDWALK SECTION

SCALE: 1" = 1'-0"

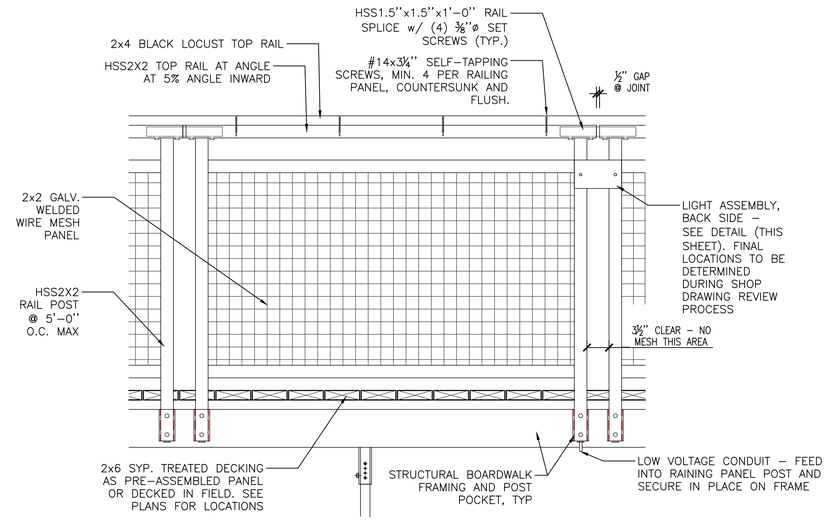


## TYPICAL BOARDWALK RAILING ELEVATION

SCALE: 1" = 1'-0"

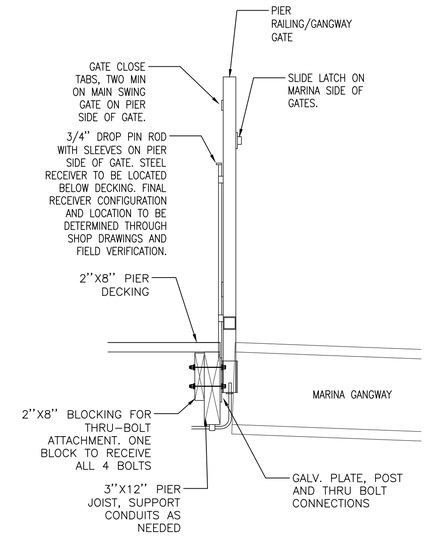


## MARINA PIER/GANGWAY GATE SECTION

SCALE: 1" = 1'-0"

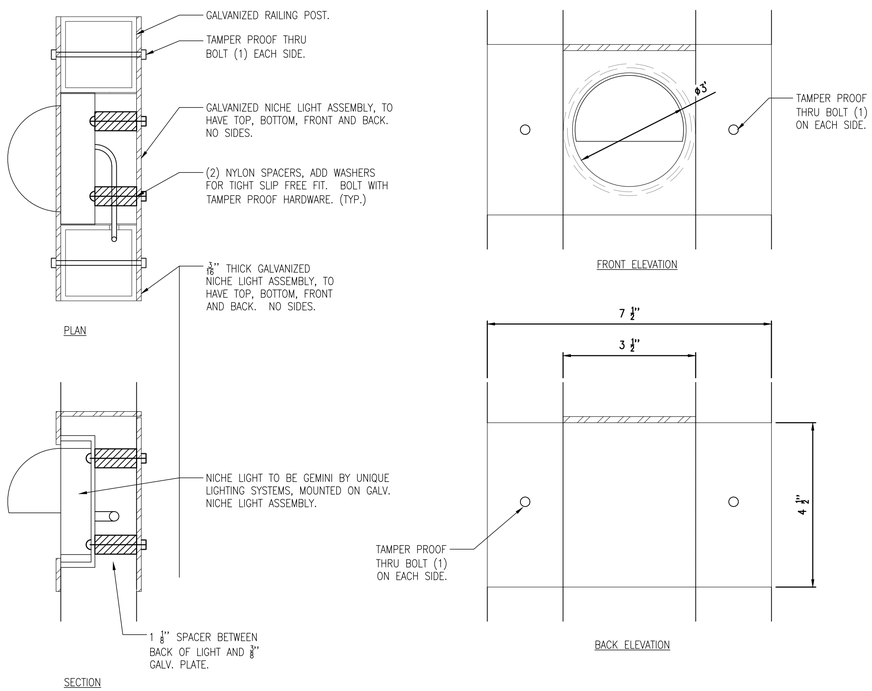


## BOARDWALK LIGHT ASSEMBLY DETAIL

SCALE: 1/2" = 1'-0"

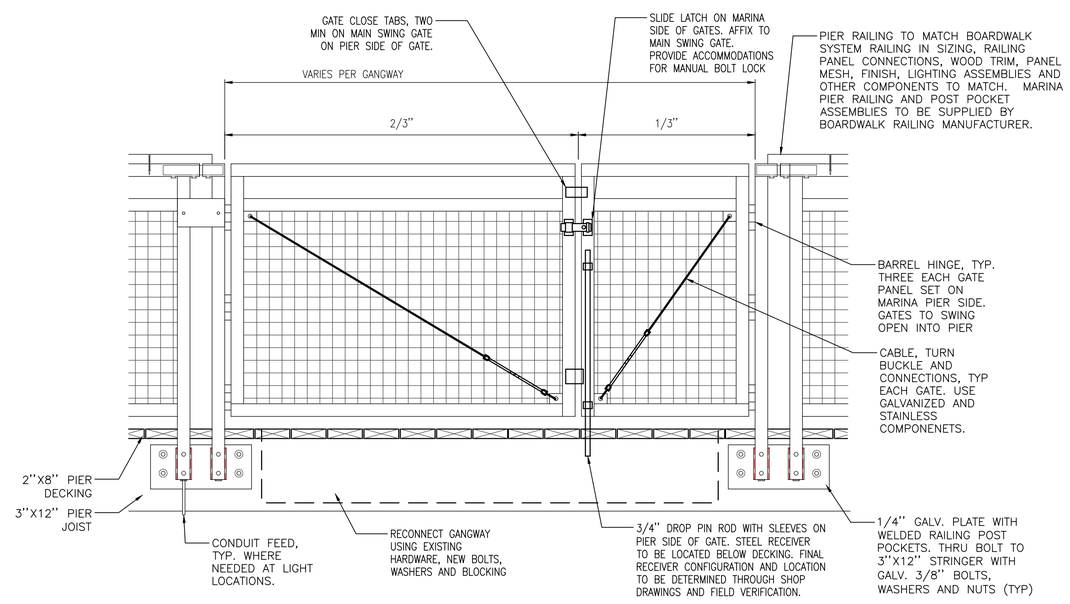


## TYPICAL MARINA PIER/GANGWAY GATE ELEV.

SCALE: 1" = 1'-0"


GoslingCzubak
engineering sciences, inc.
1280 Business Park Dr.
Traverse City, Michigan
231-946-9191 phone
info@goslingczubak.com
www.goslingczubak.com


CIVIL ENGINEERING
SURVEYING
ENVIRONMENTAL SERVICES
GEOTECHNICAL
CONSTRUCTION SERVICES
DRILLING
LANDSCAPE ARCHITECTURE

| No. | Date | Revision | By |
|---|---|---|---|

# BOARDWALK AND RAILING DETAILS
# JOINING JORDAN - PROJECT #MSC 218022-CPF
EAST JORDAN DDA

| | |
|---|---|
| Date Issued: | 12/23/2019 |
| Date Surveyed: | 09/09/2019 |
| Designed By: | KDH |
| Drawn By: | DAW |
| Checked By: | KSK |
| Scale: | AS NOTED |

Original sheet size is 22x34

Location:
SECTION 23
T32N R07W
CHARLEVOIX COUNTY
MICHIGAN
---

Project Number:
2019510004.03

Sheet:
**C11**

J:\2019510004 GOcloudstation\CD\2019510004-PS-Boardwalk Layout.dwg Tab: C11 BOARDWALK AND RAILING DETAILS Saved by: dawtz 12/23/2019 2:23 PM Plotted by: Dallas A. Wirtz, P.A., RGLA 1/13/2020 11:39 PM

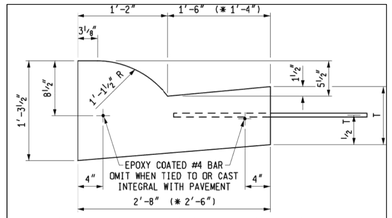


(* GUTTER PAN WIDTH MAY BE REDUCED WHEN APPROVED BY THE ENGINEER)

| DETAIL | DIMENSION T | LANE TIES | CONCRETE CYD / LFT | CONCRETE CYD / LFT |
|---|---|---|---|---|
| B1 | 9" | AS SHOWN | 0.0900 | (* 0.0855) |
| B2 | 9" | OMITTED | 0.0900 | (* 0.0855) |
| B3 | 10" | AS SHOWN | 0.0941 | (* 0.0894) |

B

## M.D.O.T. B2 CONCRETE CURB AND GUTTER DETAIL

SCALE: NTS

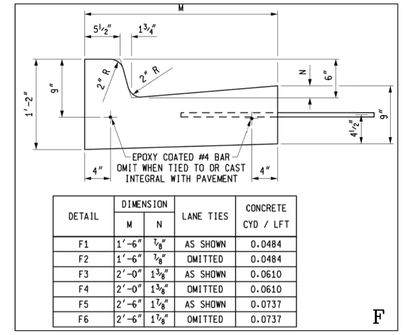


| DETAIL | DIMENSION M | DIMENSION N | LANE TIES | CONCRETE CYD / LFT |
|---|---|---|---|---|
| F1 | 1'-6" | 7/8" | AS SHOWN | 0.0484 |
| F2 | 1'-6" | 7/8" | OMITTED | 0.0484 |
| F3 | 2'-0" | 1 3/8" | AS SHOWN | 0.0610 |
| F4 | 2'-0" | 1 3/8" | OMITTED | 0.0610 |
| F5 | 2'-6" | 1 7/8" | AS SHOWN | 0.0737 |
| F6 | 2'-6" | 1 7/8" | OMITTED | 0.0737 |
| MODIFIED F4 | 2'-6" | 1 3/8" | OMITTED | 0.0737 |

F

## M.D.O.T. "MODIFIED" F CONCRETE CURB AND GUTTER DETAIL

SCALE: NTS

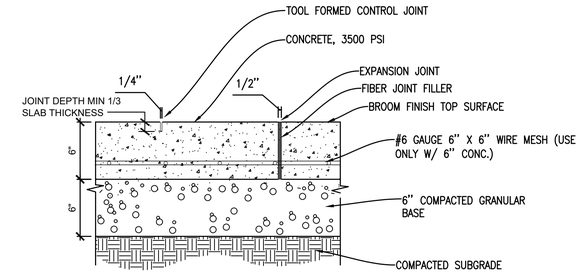


## TYPICAL CONCRETE PAVING DETAIL

SCALE: 1" = 1'-0"

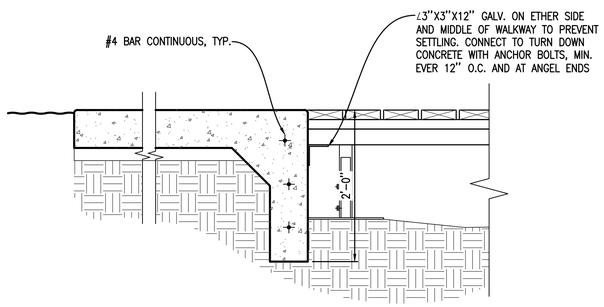


## CONC. TURN DOWN EDGE AT BOARDWALK

SCALE: 1" = 1'-0"

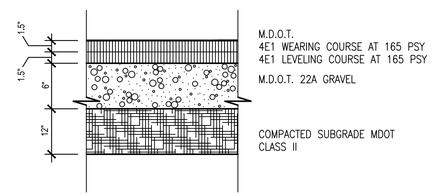


## PARKING AND ROADWAY PAVING DETAIL

NOT TO SCALE

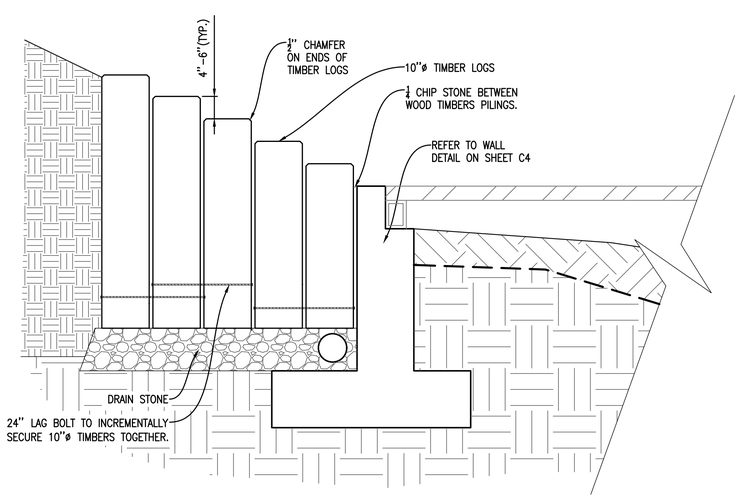


## TIMBER PILE CLUSTER SECTION

SCALE: 3/4" = 1'-0"

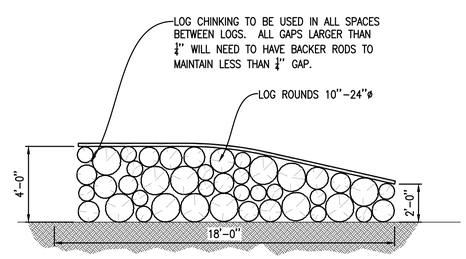


## STACKED TIMBER WALL ELEVATION

SCALE: 1/4" = 1'-0"

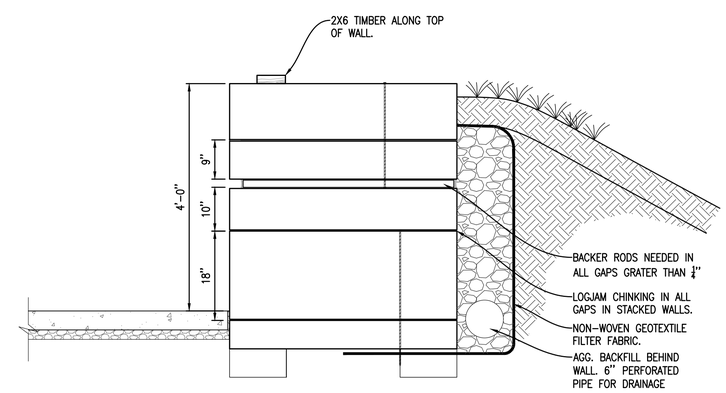


## STACKED TIMBER WALL SECTION

SCALE: 1/4" = 1'-0"


Gosling Czubak
engineering sciences, inc.
1280 Business Park Dr.
Traverse City, Michigan
231-946-9191 phone
info@goslingczubak.com
www.goslingczubak.com


CIVIL ENGINEERING
SURVEYING
ENVIRONMENTAL SERVICES
GEOTECHNICAL
CONSTRUCTION SERVICES
DRILLING
LANDSCAPE ARCHITECTURE

| No. | Date | Revision | By |
|---|---|---|---|

# CONSTRUCTION DETAILS
# JOINING JORDAN - PROJECT #MSC 218022-CPF
## EAST JORDAN DDA

| | |
|---|---|
| Date Issued: | 12/23/2019 |
| Date Surveyed: | 09/09/2019 |
| Designed By: | KDH |
| Drawn By: | DAW |
| Checked By: | KSK |
| Scale: | AS NOTED |

Original sheet size is 22x34

Location:
SECTION 23
T32N R07W
CHARLEVOIX COUNTY
MICHIGAN
---

Project Number:
2019510004.03

Sheet:
C12

J:\2019\2019004.00\docs\dwg\CD\2019\10004-PS-Details.dwg Tab: C12-CONSTRUCTION DETAILS Saved by: dawtz 11/13/2020 1:20 PM Plotted by: Dana A. Wirtz, PLA, ASLA 11/13/2020 11:45 PM

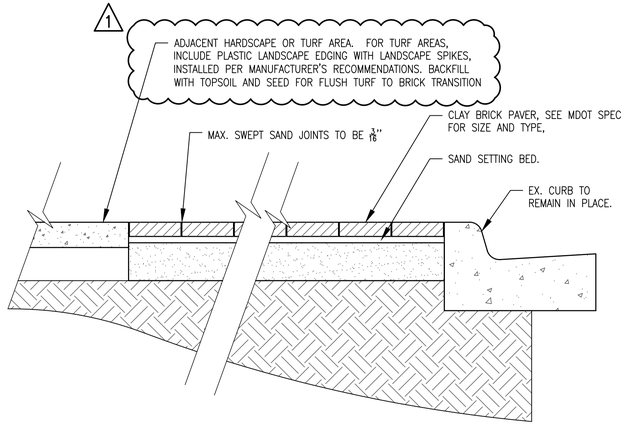


## BRICK PAVERS AT EAST END CROSS WALKS

SCALE: 1" = 1'-0"

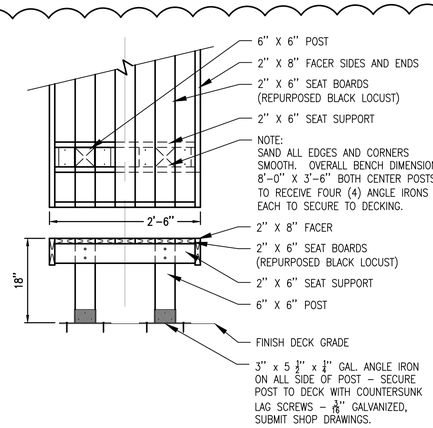


## CUSTOM TIMBER BENCH DETAIL

SCALE: 3/4" = 1'-0"

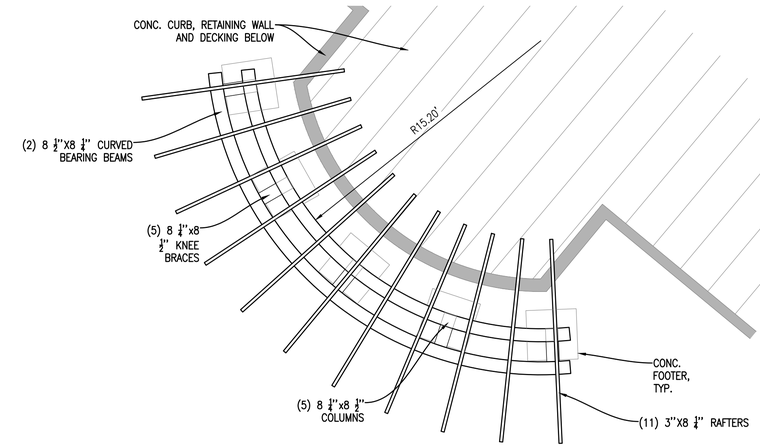


## PERGOLA STRUCTURE PLAN

SCALE: 1/4" = 1'-0"

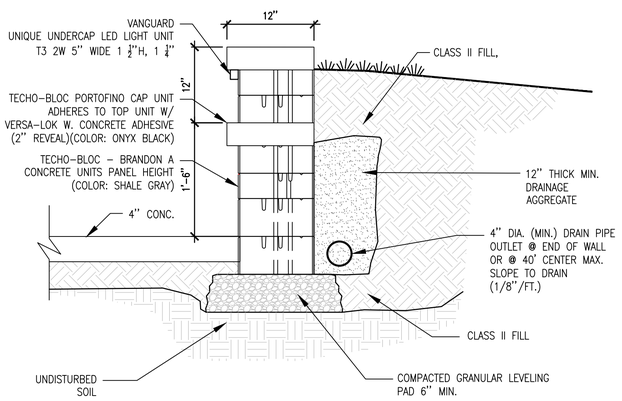


## MODULAR CONC. RETAINING WALL (SECTION)

NOT TO SCALE

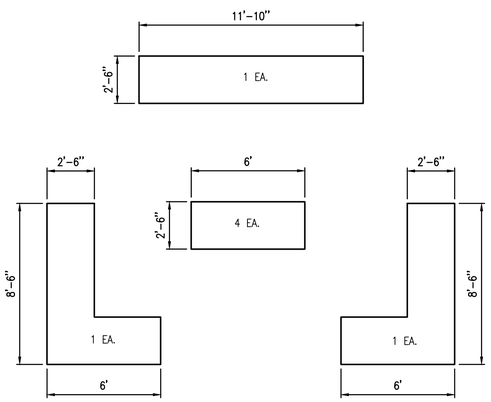


## CUSTOM TIMBER BENCH LAYOUTS

SCALE: 1/4" = 1'-0"

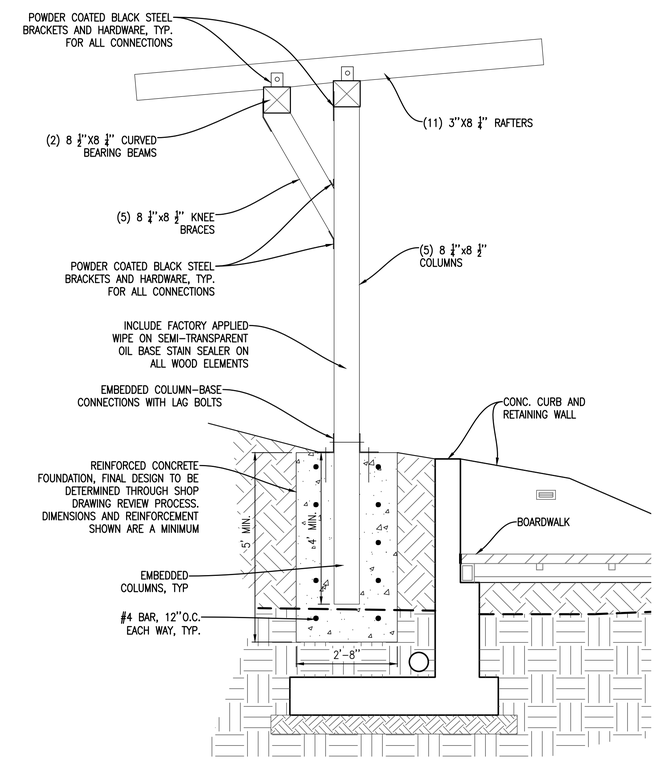


## PERGOLA STRUCTURE SECTION

SCALE: 1/2" = 1'-0"

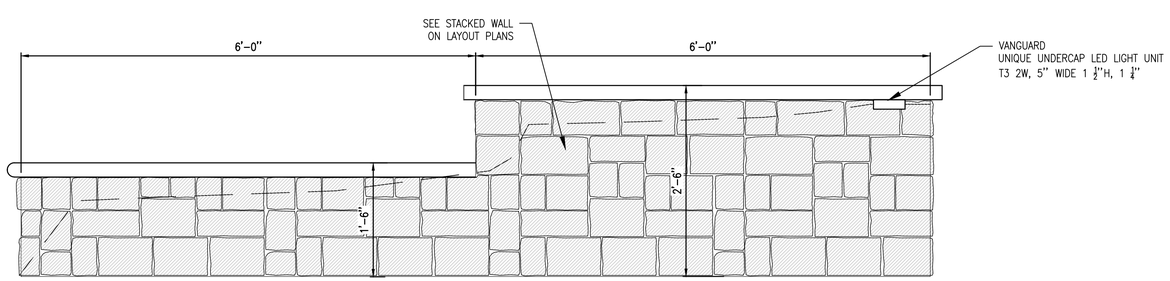


## RETAINING WALL ELEVATION

SCALE: 1" = 1'-0"

PERGOLA NOTES:

1. PERGOLA SYSTEM AND COMPONENTS SHALL BE PREFABRICATED AND SUPPLIED BY TIMBER SYSTEMS, LLC, LAPEER, MI (810) 245-6212.
2. PROVIDE ENGINEERED SHOP DRAWINGS OF PERGOLA AND FOUNDATIONS FOR REVIEW BY PROFESSIONAL PRIOR TO PURCHASE, MANUFACTURING AND INSTALLATION. ALL HARDWARE, TIMBERS, FOUNDATIONS, REINFORCEMENT TYPE AND QUANTITY ARE FOR GENERAL REFERENCE ONLY. FINAL PERGOLA CONFIGURATION, DIMENSIONING, CONNECTIONS AND FINISH TO BE DETERMINED IN THE SHOP DRAWING REVIEW PROCESS.
3. ALL TIMBER COMPONENTS TO BE CCA PRESERVATIVE PRESSURE TREATED, SOUTHER PINE, ARCHITECTURAL GRADE, GLUE LAMINATED, SMOOTH FABRICATED TIMBERS.
4. STEEL CONNECTIONS AND HARDWARE TO BE WOOD TO WOOD POWDER COATED BLACK STEEL. ALL BOLTS TO BE FIELD PAINTED BLACK AFTER INSTALLATION TO MATCH EXPOSED CONNECTION PLATES.


Gosling Czubak
engineering sciences, inc.
1280 Business Park Dr.
Traverse City, Michigan
231-946-9191 phone
info@goslingczubak.com
www.goslingczubak.com


CIVIL ENGINEERING
SURVEYING
ENVIRONMENTAL SERVICES
GEOTECHNICAL
CONSTRUCTION SERVICES
DRILLING
LANDSCAPE ARCHITECTURE

| No. | Date | Revision | By |
|---|---|---|---|
| 01 | 01/08/2020 | ADDENDUM 001 | DAW |

# CONSTRUCTION DETAILS
# JOINING JORDAN - PROJECT #MSC 218022-CPF
## EAST JORDAN DDA

| | |
|---|---|
| Date Issued: | 12/23/2019 |
| Date Surveyed: | 09/09/2019 |
| Designed By: | KDH |
| Drawn By: | DAW |
| Checked By: | KSK |
| Scale: | AS NOTED |

Original sheet size is 22x34

Location:
SECTION 23
T32N R07W
CHARLEVOIX COUNTY
MICHIGAN

Project Number:
2019510004.03

Sheet:
C13

J:\2019510004 GOnoda\data\CD\2019510004-PS-details.dwg Tab: C13 CONSTRUCTION DETAILS Saved by: dawnz 1/13/2020 11:20 PM Plotted by: Dawn A. Wirtz, PLA, ASLA 1/13/2020 11:40 PM

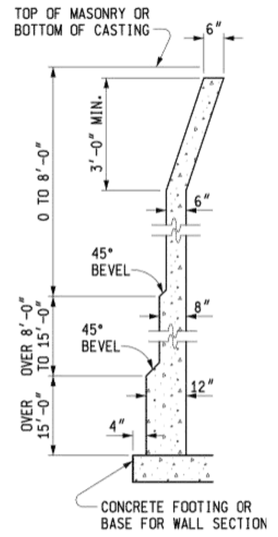


TYPICAL CAST-IN-PLACE CONCRETE WALL SECTION

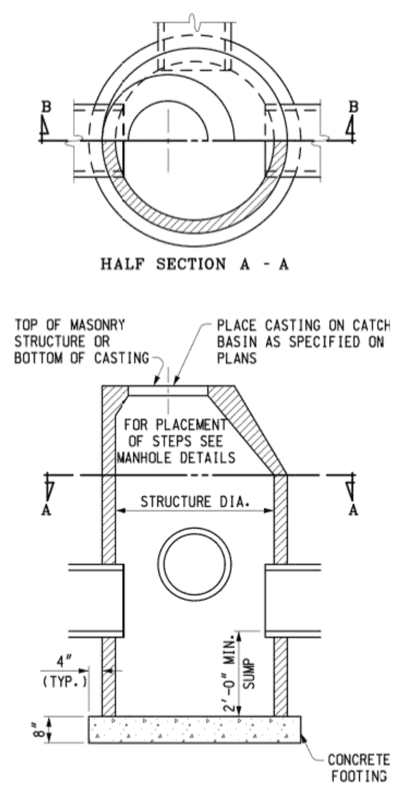


SEE MANHOLE DETAILS FOR SIZE AND BASE OPTIONS
SECTION B - B
CATCH BASIN

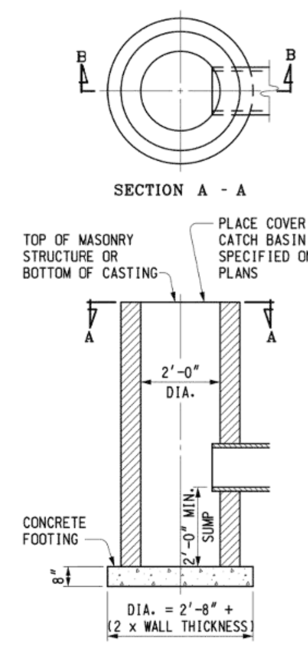


SECTION B - B
CATCH BASIN

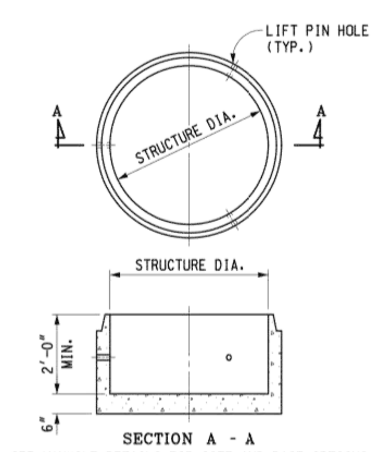


SECTION A - A
SEE MANHOLE DETAILS FOR SIZE AND BASE OPTIONS

PRECAST SUMP FOR PRECAST RISERS

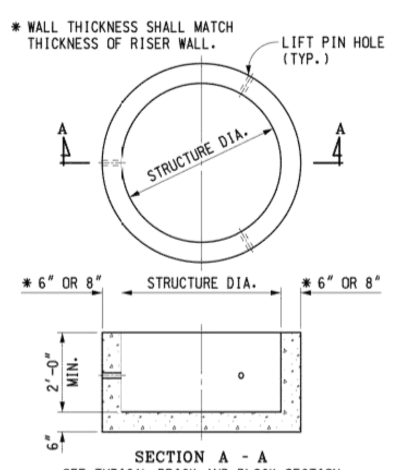


SECTION A - A
SEE TYPICAL BRICK AND BLOCK SECTION FOR SIZE AND BASE OPTIONS

PRECAST SUMP FOR BRICK OR BLOCK CONSTRUCTION

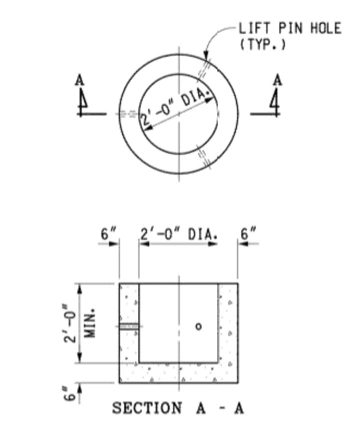


SECTION A - A

PRECAST SUMP FOR 2'-0" DIA. STRUCTURES

NOTES:

THE DRAINAGE STRUCTURE COVERS ALLOWED FOR USE ON THESE DRAINAGE STRUCTURES ARE SPECIFIED IN SUBSEQUENT STANDARD PLANS AND ARE INTERCHANGEABLE ON ANY STRUCTURE.

THE TOPS OF MASONRY STRUCTURES SHALL BE SUFFICIENTLY LOW TO PERMIT PROPER ADJUSTMENT OF COVER TO GRADE USING MORTAR OR BRICK AS DIRECTED BY THE ENGINEER.

PREMIUM JOINTS ARE REQUIRED ON ALL SANITARY MANHOLES. SEE ASTM DESIGNATION C-923.

GRANULAR MATERIAL CLASS III SHALL BE USED IN BACKFILLING AROUND ALL STRUCTURES THAT FALL WITHIN THE 1:1 INFLUENCE LINES FROM THE EDGE OF PAVEMENT OR BACK OF CURB.

STEPS FOR DRAINAGE STRUCTURES SHALL BE OF AN APPROVED DESIGN AND MADE FROM CAST IRON, ALUMINUM, OR PLASTIC COATED STEEL. RUNGS SHALL BE A MINIMUM OF 10" IN CLEAR LENGTH, DESIGNED TO PREVENT THE FOOT FROM SLIPPING OFF THE END. THE MINIMUM HORIZONTAL PULL OUT LOAD SHALL BE 400 LBS. THE MINIMUM VERTICAL LOAD SHALL BE 800 LBS.

THE BELL SHALL BE REMOVED FOR THE FIRST LENGTH OF OUTLET PIPE PROJECTING THROUGH THE WALL OF THE MANHOLE.

PRECAST CONCRETE SECTIONS, SUMPS, AND FLAT TOP SLABS SHALL BE BUILT ACCORDING TO CURRENT ASTM C-478 AND ACCORDING TO DETAILS SPECIFIED ON THIS PLAN. PRECAST REINFORCED CONCRETE FLAT TOP SLAB SHALL BE MARKED TO SHOW LOCATION OF REINFORCEMENT. THE WALLS OF THE PRECAST UNITS MAY HAVE A SLIGHT TAPER TO ALLOW FOR FORM REMOVAL. PRECAST CONCRETE 2'-0" DIAMETER DRAINAGE STRUCTURES SHALL HAVE A MINIMUM 3" WALL THICKNESS WITH A 6" MINIMUM BEARING SURFACE ON TOP. SEE PRECAST RISER RING FOR 2'-0" DIAMETER STRUCTURE.

THE MAXIMUM INSIDE DIAMETER OF PIPES ENTERING OR LEAVING PRECAST DRAINAGE STRUCTURES SHALL BE 2'-0" LESS THAN THE INSIDE DIAMETER OF THE DRAINAGE STRUCTURE. A PIPE LEAVING A 2'-0" DIAMETER DRAINAGE STRUCTURE IS ALLOWED TO HAVE 1'-0" INSIDE DIAMETER OR LESS.

THE NUMBER OF PIPE OPENINGS IN A RISER SHALL BE DETERMINED BY THE DESIGNER. SPACING BETWEEN OPENINGS SHALL BE 1'-0" MINIMUM. OPENINGS MAY BE CONSTRUCTED BY CASTING OR SCRIBING IN PRECAST STRUCTURES DURING FABRICATION OR BY CORING THE CURED CONCRETE.

PRECAST CONCRETE FOOTINGS OR BASES SHALL BE REINFORCED WITH #4 BARS SPACED AT 1'-0" BOTH WAYS OR WITH TWO LAYERS OF WELDED WIRE FABRIC OF EQUIVALENT CROSS SECTIONAL AREA LAID AT RIGHT ANGLES AND WIRED TOGETHER. REINFORCEMENT SHALL BE PLACED IN TOP OF FOOTING AND SHALL BE MARKED.

PRECAST CONCRETE FOOTINGS SHALL BE SUPPORTED BY A COMPACTED 6" GRANULAR SUBBASE.

THE MINIMUM WALL THICKNESS FOR ALL 2'-0", 4'-0", 5'-0", AND 6'-0" DRAINAGE STRUCTURES USING CONCRETE BLOCK, BRICK, OR CAST-IN-PLACE CONCRETE SHALL BE AS SPECIFIED IN TYPICAL WALL SECTIONS.

THE CONICAL SECTION OF MANHOLES OR CATCH BASINS CONSTRUCTED OF BLOCK OR BRICK SHALL BE SHROUDED WITH GEOTEXTILE FABRIC TO A MINIMUM DEPTH OF 5'-0" OR THROUGH THE FROST ZONE. ENOUGH GEOTEXTILE MATERIAL SHALL BE LEFT ON THE TOP (8" OR MORE) TO ROLL OVER THE TOP OF THE CONE.

PREFORMED HIGH DENSITY POLYSTYRENE FILLER PIECES MAY BE USED TO CHANNEL FLOW IN THE BOTTOM OF MANHOLES PROVIDED THEY HAVE AT LEAST 2" OF CONCRETE COVER. THE USE OF THIS MATERIAL FOR CHANNEL FLOW IS RESTRICTED TO MANHOLES WHERE THE BOTTOM SECTION IS NOT SUBJECT TO FREEZING. THE USE OF THIS MATERIAL MUST BE APPROVED BY THE ENGINEER.

## M.D.O.T. DRAINAGE STRUCTURE

SCALE: NTS

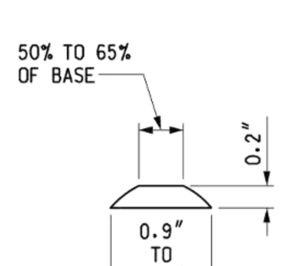


DOME SECTION

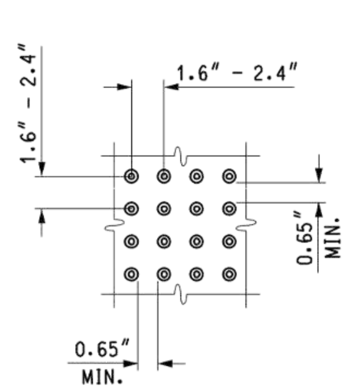


DOME SPACING

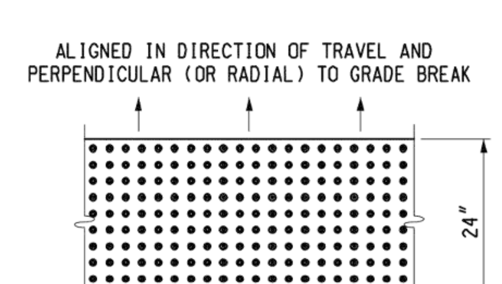


DOME ALIGNMENT

DETECTABLE WARNING DETAILS

NOTE:
DETECTABLE WARNING PLATES SHALL BE DURALAST BY EAST JORDAN IRON WORKS

## DETECTABLE WARNING DETAIL

SCALE: NTS

* MAXIMUM LANDING SLOPE IS 2.0% IN EACH DIRECTION OF TRAVEL. LANDING MINIMUM DIMENSIONS 5' x 5'. SEE NOTES.

** MAXIMUM RAMP CROSS SLOPE IS 2.0%, RUNNING SLOPE 5% - 7% (8.3% MAXIMUM). SEE NOTES.

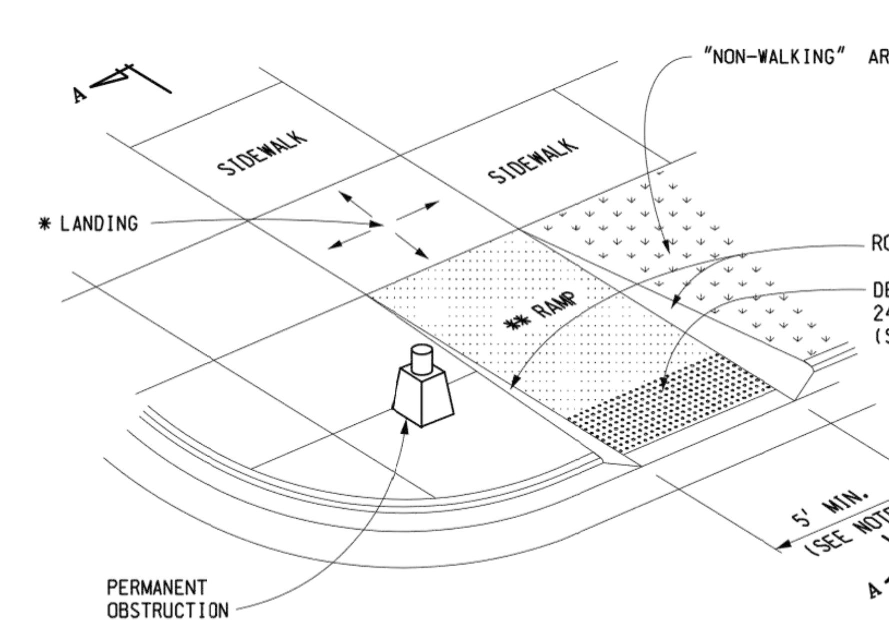


## M.D.O.T. SIDEWALK RAMP TYPE "R"

SCALE: NTS

* MAXIMUM LANDING SLOPE IS 2.0% IN EACH DIRECTION OF TRAVEL. LANDING MINIMUM DIMENSIONS 5' x 5'. SEE NOTES.

** MAXIMUM RAMP CROSS SLOPE IS 2.0%, RUNNING SLOPE 5% - 7% (8.3% MAXIMUM). SEE NOTES.

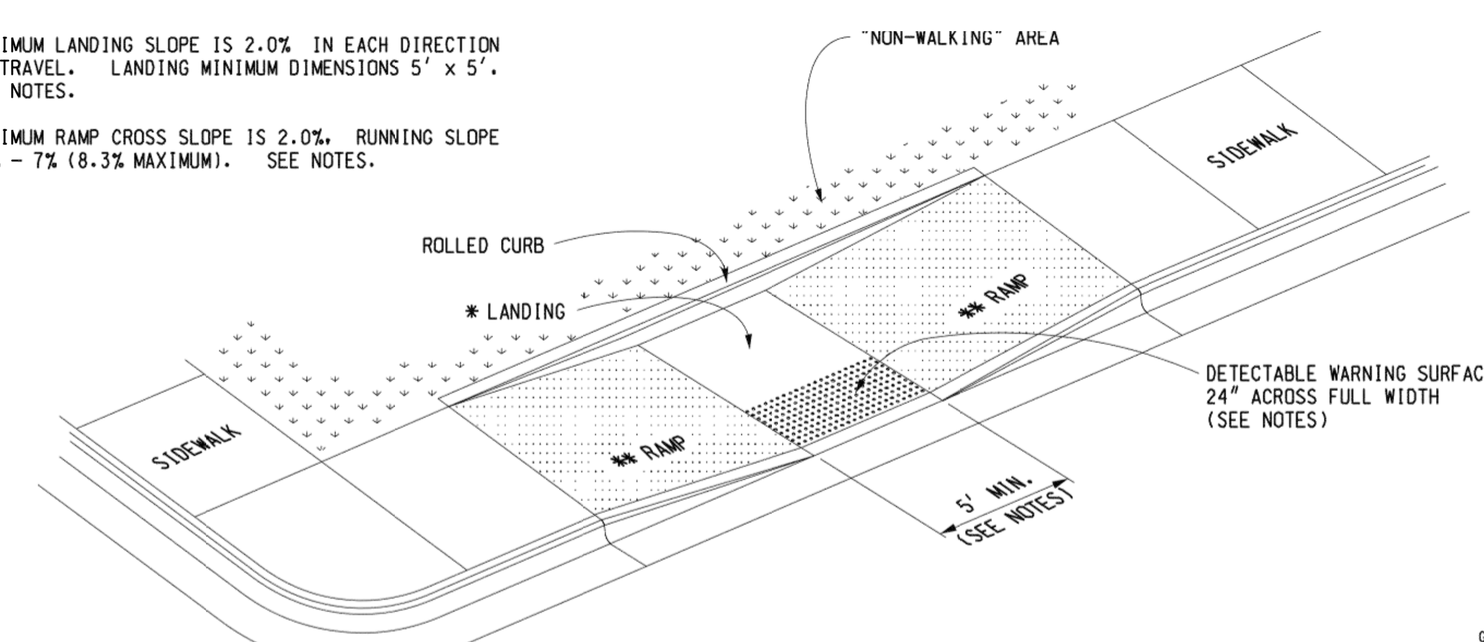


SIDEWALK RAMP TYPE P

## M.D.O.T. SIDEWALK RAMP TYPE "P"

SCALE: NTS

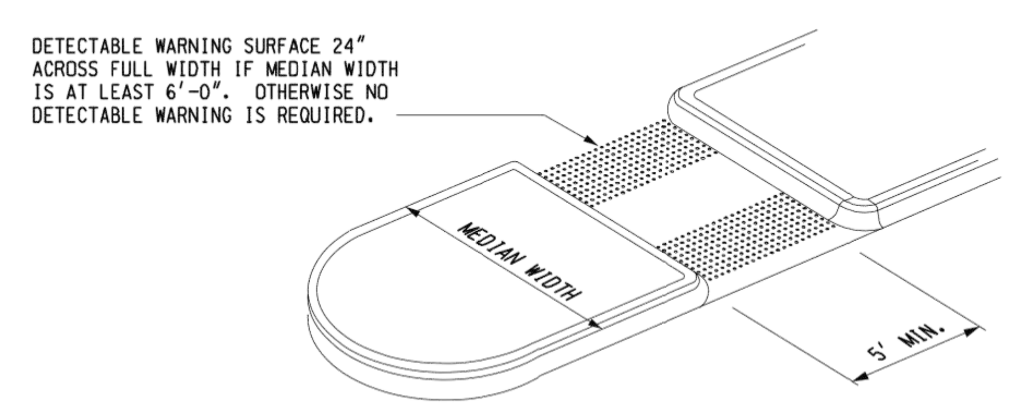


SIDEWALK RAMP TYPE M
(MEDIAN ISLAND)

## M.D.O.T. SIDEWALK RAMP TYPE "M"

SCALE: NTS

NOTES:

DETAILS SPECIFIED ON THIS PLAN APPLY TO ALL CONSTRUCTION, RECONSTRUCTION, OR ALTERATION OF STREETS, CURBS, OR SIDEWALKS IN THE PUBLIC RIGHT OF WAY.

SIDEWALK RAMPS ARE TO BE LOCATED AS SPECIFIED ON THE PLANS OR AS DIRECTED BY THE ENGINEER.

RAMPS SHALL BE PROVIDED AT ALL CORNERS OF AN INTERSECTION WHERE THERE IS EXISTING OR PROPOSED SIDEWALK AND CURB. RAMPS SHALL ALSO BE PROVIDED AT MARKED AND/OR SIGNALIZED MID-BLOCK CROSSINGS.

SURFACE TEXTURE OF THE RAMP SHALL BE THAT OBTAINED BY A COARSE BROOMING, TRANSVERSE TO THE RUNNING SLOPE.

SIDEWALK SHALL BE RAMPED WHERE THE DRIVEWAY CURB IS EXTENDED ACROSS THE WALK.

CARE SHALL BE TAKEN TO ASSURE A UNIFORM GRADE ON THE RAMP. WHERE CONDITIONS PERMIT, IT IS DESIRABLE THAT THE SLOPE OF THE RAMP BE IN ONLY ONE DIRECTION, PARALLEL TO THE DIRECTION OF TRAVEL.

RAMP WIDTH SHALL BE INCREASED, IF NECESSARY, TO ACCOMMODATE SIDEWALK SNOW REMOVAL EQUIPMENT NORMALLY USED BY THE MUNICIPALITY.

WHEN 5' MINIMUM WIDTHS ARE NOT PRACTICABLE, RAMP WIDTH MAY BE REDUCED TO NOT LESS THAN 4' AND LANDINGS TO NOT LESS THAN 4' x 4'.

CURB RAMPS WITH A RUNNING SLOPE ≤5% DO NOT REQUIRE A TOP LANDING. HOWEVER, ANY CONTINUOUS SIDEWALK OR PEDESTRIAN ROUTE CROSSING THROUGH OR INTERSECTING THE CURB RAMP MUST INDEPENDENTLY MAINTAIN A CROSS SLOPE NOT GREATER THAN 2% PERPENDICULAR TO ITS OWN DIRECTION(S) OF TRAVEL.

DETECTABLE WARNING SURFACE COVERAGE IS 24" MINIMUM IN THE DIRECTION OF RAMP/PATH TRAVEL AND THE FULL WIDTH OF THE RAMP/PATH OPENING EXCLUDING CURBED OR FLARED CURB TRANSITION AREAS. A BORDER OFFSET NOT GREATER THAN 2" MEASURED ALONG THE EDGES OF THE DETECTABLE WARNING IS ALLOWABLE. FOR RADIAL CURB THE OFFSET IS MEASURED FROM THE ENDS OF THE RADIUS.

FOR NEW ROADWAY CONSTRUCTION, THE RAMP CROSS SLOPE MAY NOT EXCEED 2.0%. FOR ALTERATIONS TO EXISTING ROADWAYS, THE CROSS SLOPE MAY BE TRANSITIONED TO MEET AN EXISTING ROADWAY GRADE. THE CROSS SLOPE TRANSITION SHALL BE APPLIED UNIFORMLY OVER THE FULL LENGTH OF THE RAMP.

THE MAXIMUM RUNNING SLOPE OF 8.3% IS RELATIVE TO A FLAT (0%) REFERENCE. HOWEVER, IT SHALL NOT REQUIRE ANY RAMP OR SERIES OF RAMPS TO EXCEED 15 FEET IN LENGTH NOT INCLUDING LANDINGS OR TRANSITIONS.

DRAINAGE STRUCTURES SHOULD NOT BE PLACED IN LINE WITH RAMPS. THE LOCATION OF THE RAMP SHOULD TAKE PRECEDENCE OVER THE LOCATION OF THE DRAINAGE STRUCTURE. WHERE EXISTING DRAINAGE STRUCTURES ARE LOCATED IN THE RAMP PATH OF TRAVEL, USE A MANUFACTURER'S ADA COMPLIANT GRATE. OPENINGS SHALL NOT BE GREATER THAN 1/2". ELONGATED OPENINGS SHALL BE PLACED SO THAT THE LONG DIMENSION IS PERPENDICULAR TO THE DOMINANT DIRECTION OF TRAVEL.

THE TOP OF THE JOINT FILLER FOR ALL RAMP TYPES SHALL BE FLUSH WITH THE ADJACENT CONCRETE.

CROSSWALK AND STOP LINE MARKINGS, IF USED, SHALL BE SO LOCATED AS TO STOP TRAFFIC SHORT OF RAMP CROSSINGS. SPECIFIC DETAILS FOR MARKING APPLICATIONS ARE GIVEN IN THE "MICHIGAN MANUAL ON UNIFORM TRAFFIC CONTROL DEVICES".

FLARED SIDES WITH A SLOPE OF 10% MAXIMUM, MEASURED ALONG THE ROADSIDE CURB LINE, SHALL BE PROVIDED WHERE AN UNOBSTRUCTED CIRCULATION PATH LATERALLY CROSSES THE SIDEWALK RAMP. FLARED SIDES ARE NOT REQUIRED WHERE THE RAMP IS BORDERED BY LANDSCAPING, UNPAVED SURFACE OR PERMANENT FIXED OBJECTS. WHERE THEY ARE NOT REQUIRED, FLARED SIDES CAN BE CONSIDERED IN ORDER TO AVOID SHARP CURB RETURNS AT RAMP OPENINGS.

DETECTABLE WARNING PLATES MUST BE INSTALLED USING FABRICATED OR FIELD CUT UNITS CAST AND/OR ANCHORED IN THE PAVEMENT TO RESIST SHIFTING OR HEAVING.

## SIDEWALK RAMP AND DETECTABLE WARNING NOTES

SCALE: NTS

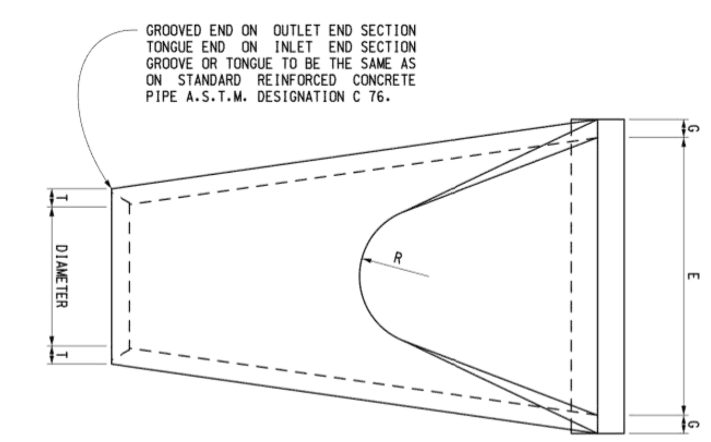


PLAN VIEW

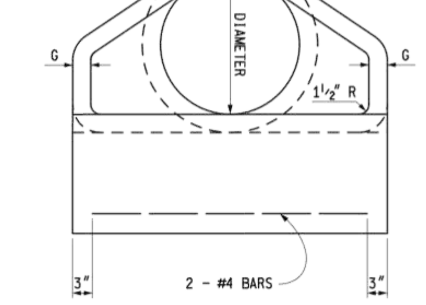


END ELEVATION

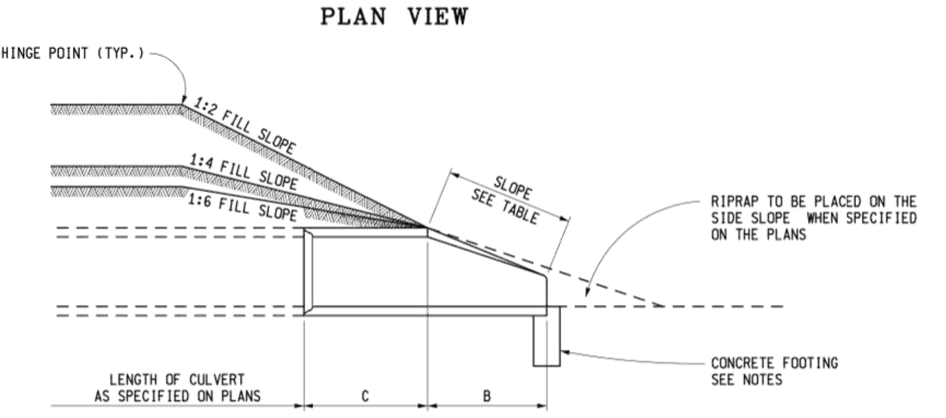


SLOPE DETAIL

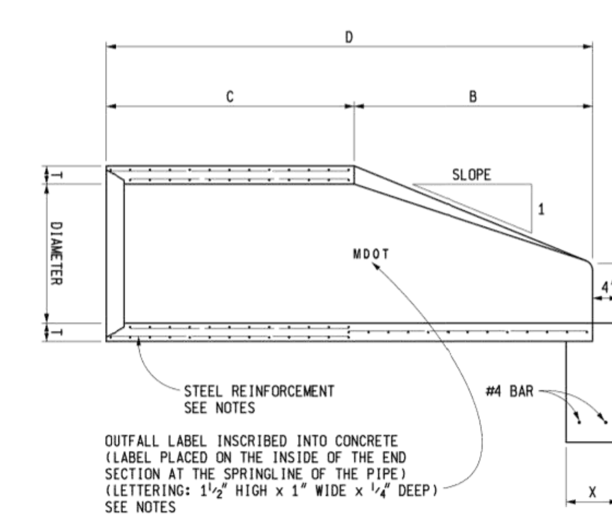


LONGITUDINAL SECTION

TABLE OF DIMENSIONS

| PIPE DIAMETER (INCHES) | APPROX. SLOPE | T (INCHES) | A (INCHES) | B (INCHES) | C (INCHES) | D (INCHES) | E (INCHES) | G (INCHES) | R (INCHES) | X (INCHES) | Y (INCHES) |
|---|---|---|---|---|---|---|---|---|---|---|---|
| 12 | 2.4 to 1 | 2 | 4 | 24 | 49 | 73 | 24 | 2 | 9 | 8 | 18 |
| 15 | 2.4 to 1 | 2 1/4 | 6 | 27 | 46 | 73 | 30 | 2 1/4 | 11 | 8 | 18 |
| 18 | 2.3 to 1 | 2 1/2 | 9 | 27 | 46 | 73 | 36 | 2 1/2 | 12 | 8 | 18 |
| 21 | 2.4 to 1 | 2 3/4 | 9 | 36 | 37 1/2 | 73 1/2 | 42 | 2 3/4 | 13 | 8 | 18 |
| 24 | 2.5 to 1 | 3 | 9 1/2 | 43 1/4 | 30 1/2 | 73 3/4 | 48 | 3 | 14 | 8 | 18 |
| 27 | 2.5 to 1 | 3 1/4 | 10 1/2 | 49 1/4 | 24 1/2 | 73 3/4 | 54 | 3 1/4 | 14 1/2 | 8 | 18 |
| 30 | 2.5 to 1 | 3 1/2 | 12 | 54 | 19 3/4 | 73 3/4 | 60 | 3 1/2 | 15 | 8 | 18 |
| 36 | 2.5 to 1 | 4 | 15 | 63 | 34 3/4 | 97 3/4 | 72 | 4 | 20 | 8 | 18 |
| 42 | 2.5 to 1 | 4 1/2 | 21 | 63 | 35 | 98 | 78 | 4 1/2 | 22 | 10 | 24 |
| 48 | 2.5 to 1 | 5 | 24 | 72 | 26 | 98 | 84 | 5 | 22 | 10 | 24 |
| 54 | 2.0 to 1 | 5 1/2 | 27 | 65 | 33 1/4 | 98 1/4 | 90 | 5 1/2 | 24 | 10 | 24 |
| 60 | 1.9 to 1 | 6 | 35 | 60 | 39 | 99 | 96 | 5 | * | 12 | 24 |
| 66 | 1.7 to 1 | 6 1/2 | 30 | 72 | 27 | 99 | 102 | 5 1/2 | * | 12 | 24 |
| 72 | 1.8 to 1 | 7 | 36 | 78 | 21 | 99 | 108 | 6 | * | 12 | 24 |
| 78 | 1.8 to 1 | 7 1/2 | 36 | 90 | 21 | 111 | 114 | 6 1/2 | * | 12 | 24 |
| 84 | 1.6 to 1 | 8 | 36 | 90 1/2 | 21 | 111 1/2 | 120 | 6 1/2 | * | 12 | 24 |

* AS FURNISHED BY THE MANUFACTURER

NOTES:

CONCRETE IN THESE END SECTIONS SHALL BE THE SAME GRADE AND STRENGTH AS SPECIFIED FOR REINFORCED CONCRETE PIPE. A.S.T.M. DESIGNATION C 76 CLASS II, EXCEPT AS MODIFIED BY THE STANDARD SPECIFICATION.

REINFORCEMENT IN THE "C" PORTION SHALL BE THE SAME AS SPECIFIED FOR REINFORCED CONCRETE, A.S.T.M. DESIGNATION C 76 CLASS II FOR THE SIZE OF CONNECTING PIPE.

REINFORCEMENT IN THE "B" PORTION SHALL HAVE A CROSS-SECTIONAL AREA EQUAL TO THAT OF ONE LAYER OF STEEL IN THE "C" PORTION.

THE END OF THE PIPE CULVERT SHALL BE PLACED IN THE CONCRETE END SECTION SO THAT THE FLOW LINES ARE FLUSH. THE JOINT MUST BE COMPLETELY FILLED WITH MORTAR ON THE INSIDE AND OUTSIDE AND STRUCK FLUSH. THE JOINT MUST BE WRAPPED WITH GEOTEXTILE BLANKET 36" WIDE WITH A 12" OVERLAP.

TO CHANGE THE FILL SLOPE TO THE SLOPE OF THE END SECTION USE A TRANSITION SLOPE OF APPROXIMATELY 10' IN LENGTH TO PROVIDE A PLEASING APPEARANCE.

VARIATIONS IN DIMENSIONS - THE THICKNESS OF CONCRETE, THE POSITION OF STEEL, AND THE INTERNAL DIAMETER OF THE PIPE SHALL CONFORM WITH THE VARIATIONS IN DIMENSIONS AS PROVIDED IN THE SPECIFICATIONS FOR REINFORCED CONCRETE CULVERT, STORM DRAINS, AND SEWER PIPE, A.S.T.M. DESIGNATION C 76.

PLACE CONCRETE FOOTING AS SHOWN.

OUTFALL LABEL TO BE USED ONLY WHERE STORMWATER WILL DISCHARGE DIRECTLY TO THE WATERS OF THE STATE.

## MDOT PRECAST CONCRETE CULVERT END SECTION

SCALE: NTS

Gosling Czubak
engineering sciences, inc.
1280 Business Park Dr.
Traverse City, Michigan
231-946-9191 phone
info@goslingczubak.com
www.goslingczubak.com

CIVIL ENGINEERING
SURVEYING
ENVIRONMENTAL SERVICES
GEOTECHNICAL
CONSTRUCTION SERVICES
DRILLING
LANDSCAPE ARCHITECTURE

| No. | Date | Revision | By |
|---|---|---|---|
| | | | |

# CONSTRUCTION DETAILS - MDOT DETAILS
# JOINING JORDAN - PROJECT #MSC 218022-CPF
## EAST JORDAN DDA

| | |
|---|---|
| Date Issued: | 12/23/2019 |
| Date Surveyed: | 09/09/2019 |
| Designed By: | KDH |
| Drawn By: | DAW |
| Checked By: | KSK |
| Scale: | AS NOTED |

Original sheet size is 22x34

Location:
SECTION 23
T32N R07W
CHARLEVOIX COUNTY
MICHIGAN
----

Project Number:
2019510004.03

Sheet:
C14

p:\2019510004.00\cadd-data\C3D\2019510004-P-MDOT Details.dwg Tab: C14 CONSTRUCTION DETAILS - MDOT DETAILS Saved by: dawirtz 12/23/2019 3:18 PM Plotted by: Dallas A. Wirtz, PLA, ASLA 1/13/2020 11:40 PM

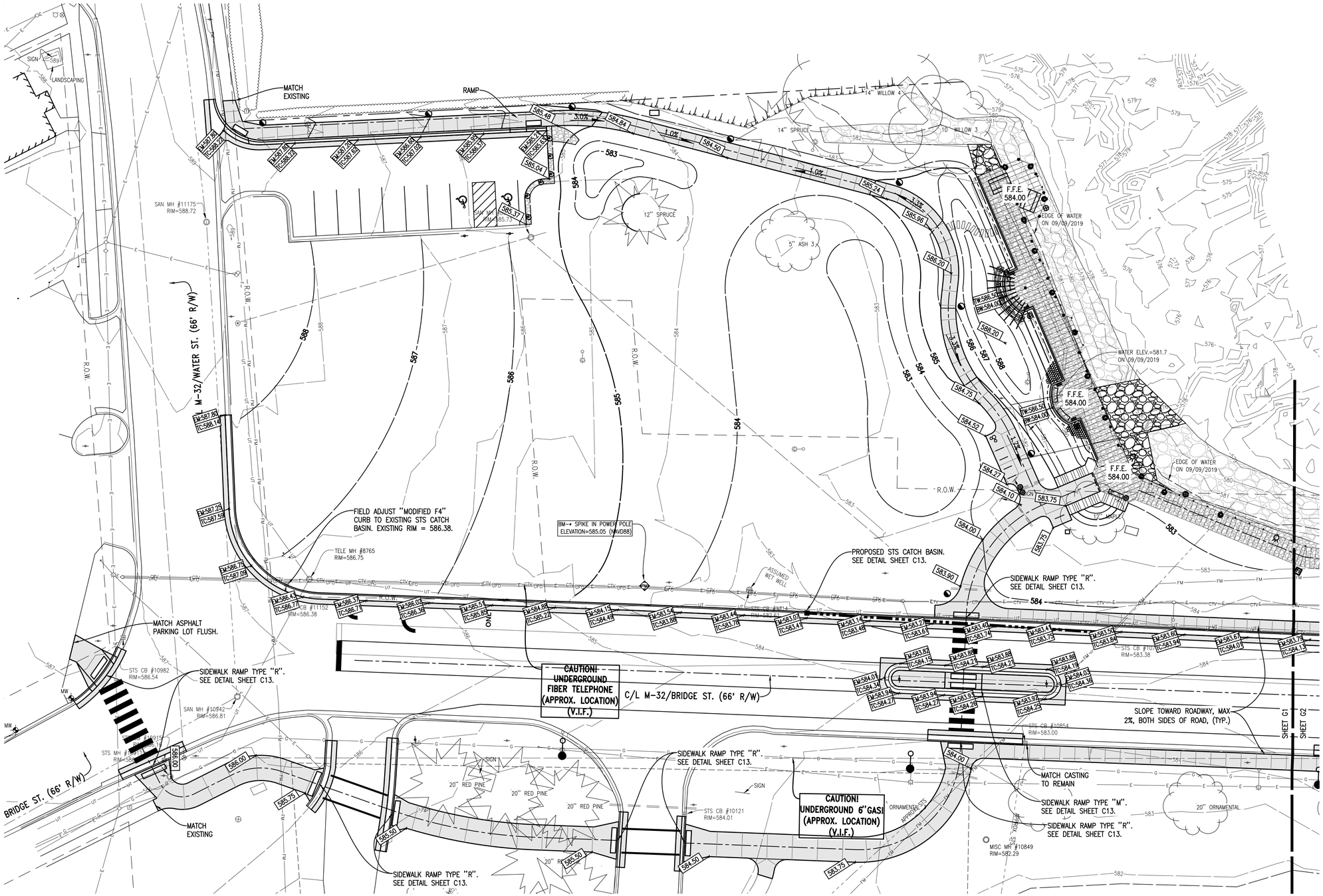


## GRADING PLAN 01

SCALE: 1" = 20'

NORTH

SCALE 1" = 20'

0' 20' 40'

811 Know what's below. Call before you dig.

THE LOCATION OF THE EXISTING UTILITIES, AS SHOWN ON THIS PLAN, ARE APPROXIMATE ONLY. IT SHALL BE THE RESPONSIBILITY OF THE CONTRACTOR TO VERIFY ACTUAL LOCATION AND DEPTH OF ALL EXISTING UTILITIES. THE OWNER AND THE SURVEYOR SHALL NOT BE RESPONSIBLE FOR ANY OMISSION OR VARIATION FROM THE LOCATION SHOWN. THE CONTRACTOR SHALL NOTIFY "MISS DIG" AT 1 (800) 482-7171 OR 811 THREE (3) WORKING DAYS PRIOR TO THE START OF CONSTRUCTION.


GoslingCzubak
engineering sciences, inc.
1280 Business Park Dr.
Traverse City, Michigan
231-946-9191 phone
info@goslingczubak.com
www.goslingczubak.com


CIVIL ENGINEERING
SURVEYING
ENVIRONMENTAL SERVICES
GEOTECHNICAL
CONSTRUCTION SERVICES
DRILLING
LANDSCAPE ARCHITECTURE

| No. | Date | Revision | By |
|---|---|---|---|

# GRADING PLAN - AREA 01
# JOINING JORDAN - PROJECT #MSC 218022-CPF
## EAST JORDAN DDA

| | |
|---|---|
| Date Issued: | 12/23/2019 |
| Date Surveyed: | 09/09/12019 |
| Designed By: | KDH |
| Drawn By: | DAW |
| Checked By: | KSK |
| Scale: | AS NOTED |

Original sheet size is 22x34

Location:
SECTION 23
T32N R07W
CHARLEVOIX COUNTY
MICHIGAN

Project Number:
2019510004.03

Sheet:
G1

J:\2019510004 EJ\cadd\dwg\CD\2019510004-PS-Grading.dwg, Tab: G1 GRADING PLAN - AREA 01, Saved by: daniel 11/5/2020 2:35 PM, Plotted by: Daniel A Witte, PLA, ASLA 11/5/2020 11:40 PM

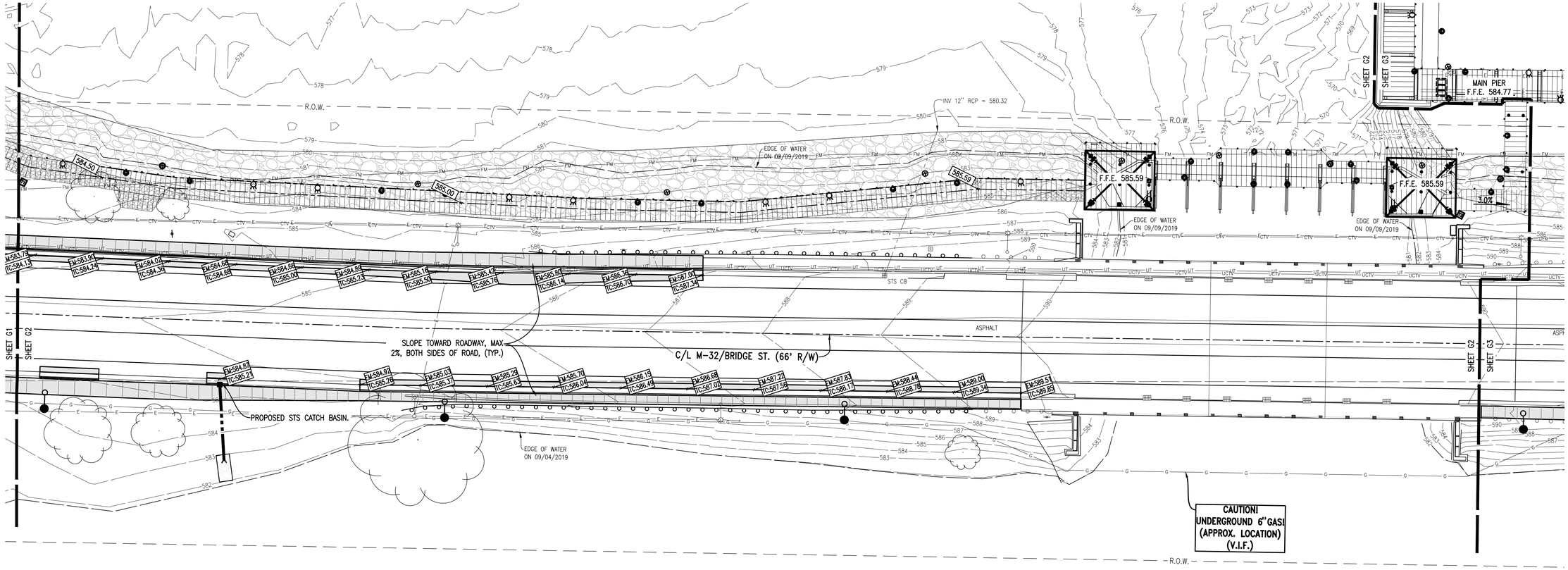


## GRADING PLAN 02

SCALE: 1" = 20'

NORTH

SCALE 1" = 20'

0' 20' 40'

811 Know what's below. Call before you dig.

THE LOCATION OF THE EXISTING UTILITIES, AS SHOWN ON THIS PLAN, ARE APPROXIMATE ONLY. IT SHALL BE THE RESPONSIBILITY OF THE CONTRACTOR TO VERIFY ACTUAL LOCATION AND DEPTH OF ALL EXISTING UTILITIES. THE OWNER AND THE SURVEYOR SHALL NOT BE RESPONSIBLE FOR ANY OMISSION OR VARIATION FROM THE LOCATION SHOWN. THE CONTRACTOR SHALL NOTIFY "MISS DIG" AT 1 (800) 482-7171 OR 811 THREE (3) WORKING DAYS PRIOR TO THE START OF CONSTRUCTION.


GoslingCzubak
engineering sciences, inc.
1280 Business Park Dr.
Traverse City, Michigan
231-946-9191 phone
info@goslingczubak.com
www.goslingczubak.com


CIVIL ENGINEERING
SURVEYING
ENVIRONMENTAL SERVICES
GEOTECHNICAL
CONSTRUCTION SERVICES
DRILLING
LANDSCAPE ARCHITECTURE

| No. | Date | Revision | By |
|---|---|---|---|

# GRADING PLAN - AREA 02
# JOINING JORDAN - PROJECT #MSC 218022-CPF
## EAST JORDAN DDA

| | |
|---|---|
| Date Issued: | 12/23/2019 |
| Date Surveyed: | 09/09/2019 |
| Designed By: | KDH |
| Drawn By: | DAW |
| Checked By: | KSK |
| Scale: | AS NOTED |

Original sheet size is 22x34

Location:
SECTION 23
T32N R07W
CHARLEVOIX COUNTY
MICHIGAN
---

Project Number:
2019510004.03

Sheet:
**G2**

P:\2019\510004\Goods\dwg\CD\2019\10004-PS-Grading.dwg Tab: C2-GRADING PLAN - AREA 02 Saved by: dawatts 11/12/2020 3:25 PM Plotted by: Dallas A. Watts; PLA,ASLA 11/12/2020 11:42 PM

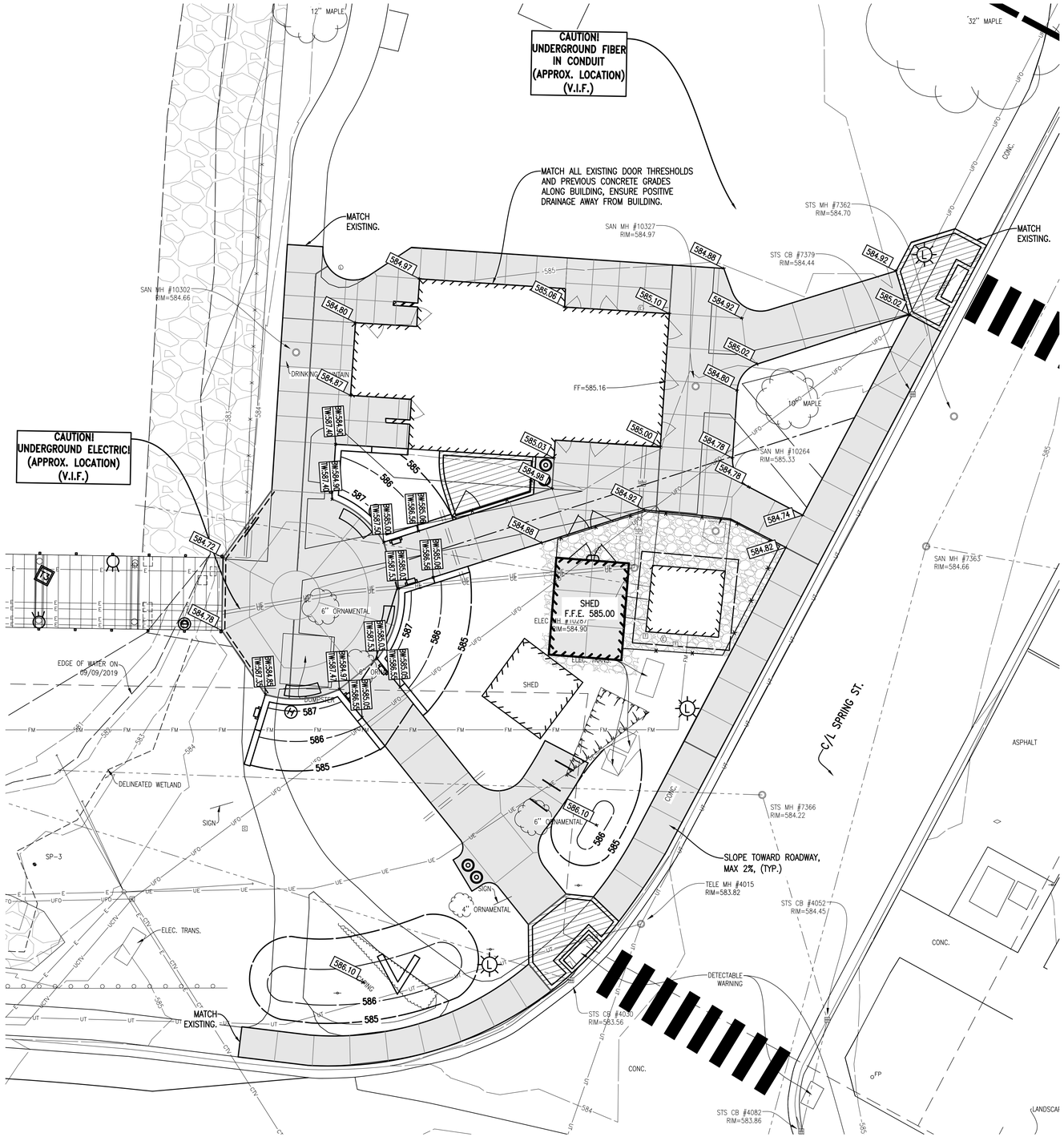


## GRADING PLAN 03

SCALE: 1" = 20'

NORTH

SCALE 1" = 10'

0' 10' 20'

Know what's below. Call before you dig.

THE LOCATION OF THE EXISTING UTILITIES, AS SHOWN ON THIS PLAN, ARE APPROXIMATE ONLY. IT SHALL BE THE RESPONSIBILITY OF THE CONTRACTOR TO VERIFY ACTUAL LOCATION AND DEPTH OF ALL EXISTING UTILITIES. THE OWNER AND THE SURVEYOR SHALL NOT BE RESPONSIBLE FOR ANY OMISSION OR VARIATION FROM THE LOCATION SHOWN. THE CONTRACTOR SHALL NOTIFY "MISS DIG" AT 1 (800) 482-7171 OR 811 THREE (3) WORKING DAYS PRIOR TO THE START OF CONSTRUCTION.


GoslingCzubak
engineering sciences, inc.
1280 Business Park Dr.
Traverse City, Michigan
231-946-9191 phone
info@goslingczubak.com
www.goslingczubak.com


CIVIL ENGINEERING
SURVEYING
ENVIRONMENTAL SERVICES
GEOTECHNICAL
CONSTRUCTION SERVICES
DRILLING
LANDSCAPE ARCHITECTURE

| No. | Date | Revision | By |
|---|---|---|---|

# GRADING PLAN - AREA 03
# JOINING JORDAN - PROJECT #MSC 218022-CPF
## EAST JORDAN DDA

| | |
|---|---|
| Date Issued: | 12/23/2019 |
| Date Surveyed: | 09/09/2019 |
| Designed By: | KDH |
| Drawn By: | DAW |
| Checked By: | KSK |
| Scale: | AS NOTED |

Original sheet size is 22x34

Location:
SECTION 23
T32N R07W
CHARLEVOIX COUNTY
MICHIGAN

Project Number:
2019510004.03

Sheet:
G3

P:\2019\510004.00\cadd-data\CD\2019510004-PS-Grading.dwg Tab: G3 GRADING PLAN - AREA 03 Saved by: daweitz 1/13/2020 5:25 PM Plotted by: Dallas A. Weitz, PLA ASLA 1/13/2020 11:40 PM

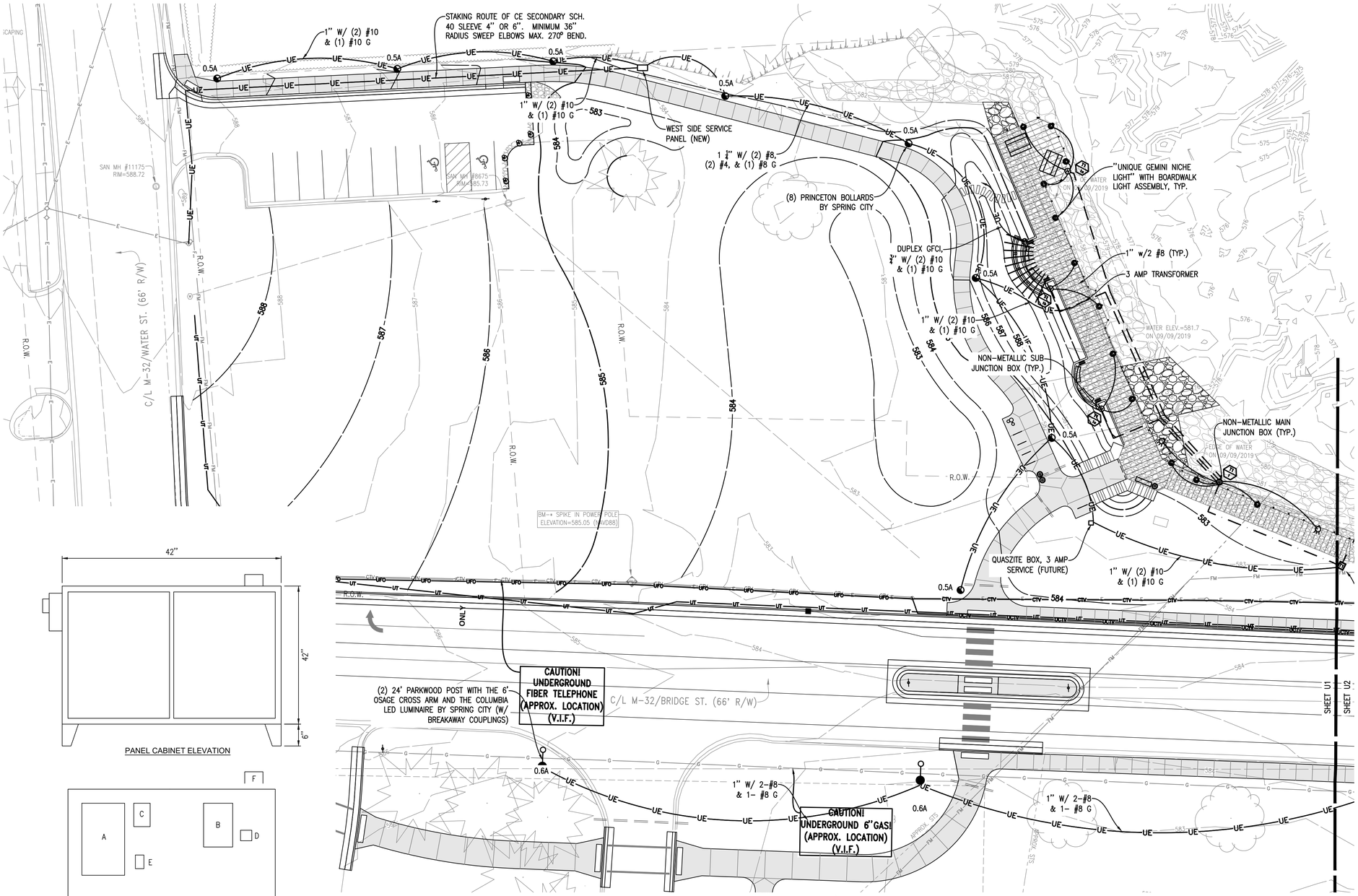


## UTILITY PLAN AREA 01

SCALE: 1" = 20'

NORTH

SCALE 1" = 20'

0' 20' 40'




PANEL CABINET ELEVATION

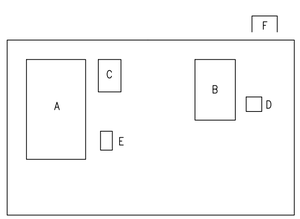


SCHEMATIC PANEL LAYOUT

| TAG | DESCRIPTION | MANUFACTURER | CATALOG # | NOTES |
|---|---|---|---|---|
| A | CIRCUIT BREAKER LOADCENTER | SQUARE D | QO130M200 | SURFACE COVER, GROUND BAR AND BREAKERS AS SHOWN. |
| B | SURGE PROTECTIVE DEVICE (SPD) | SQUARE D | TVS120XR50S | 50 KA, 240/120 VOLT |
| C | LIGHTING CONTACTOR | SQUARE D | 8903LG80V02 | 8 POLE NEMA 1 ENCLOSURE |
| D | HAND-OFF-AUTO SWITCH | SQUARE D | 9001SKS43BH2 | WITH LEGEND PLATE CATALOG 9001KN260BP AND SURFACE ENCLOSURE |
| E | GFCI RECEPTACLE | HUBBELL | GF15 | WITH MOUNTING BOX AND COVERPLATE |
| F | PHOTOCELL | INTERMATIC | K4221 | WITH SWIVEL |

CABINET TO BE HOFFMAN CATALOG # A424212WLFP WITH LET SET AFK0612 AND BACK PANEL A42P42.
SET ON CONCRETE PAD PER MANUFACTURER'S RECOMMENDATIONS.

## SERVICE PANEL LAYOUT - WEST SIDE

N.T.S.

## General Legend

- PROJECT LIMITS
- EDGE OF WATER
- EX EDGE OF GRAVEL
- EX EDGE OF CONCRETE
- EX OVERHEAD ELECTRIC
- EX UNDERGROUND ELECTRIC
- EX UNDERGROUND GAS
- EX SANITARY SEWER LINE
- EX SANITARY FORCEMAIN
- EX STORM SEWER LINE
- EX CONCRETE CURB
- EX WOOD BOLLARD
- EX CONIFEROUS TREE
- EX DECIDUOUS TREE
- PROP. EDGE OF ASPHALT
- PROP. EDGE OF CONCRETE
- PROP. OVERHEAD ELECTRIC
- PROP. UNDERGROUND ELEC.
- PROP. STORM SEWER LINE
- PROP. CONCRETE CURB

NOTES ON LOW VOLTAGE LIGHTING DISTRIBUTION SYSTEM, LIGHT CHANGE OUT, AND OTHER CHANGES HAVE BEEN MADE ON THIS SHEET.

811 Know what's below. Call before you dig.

THE LOCATION OF THE EXISTING UTILITIES, AS SHOWN ON THIS PLAN, ARE APPROXIMATE ONLY. IT SHALL BE THE RESPONSIBILITY OF THE CONTRACTOR TO VERIFY ACTUAL LOCATION AND DEPTH OF ALL EXISTING UTILITIES. THE OWNER AND THE SURVEYOR SHALL NOT BE RESPONSIBLE FOR ANY OMISSION OR VARIATION FROM THE LOCATION SHOWN. THE CONTRACTOR SHALL NOTIFY "MISS DIG" AT 1 (800) 482-7171 OR 811 THREE (3) WORKING DAYS PRIOR TO THE START OF CONSTRUCTION.


GoslingCzubak
engineering sciences, inc.
1280 Business Park Dr.
Traverse City, Michigan
231-946-9191 phone
info@goslingczubak.com
www.goslingczubak.com


CIVIL ENGINEERING
SURVEYING
ENVIRONMENTAL SERVICES
GEOTECHNICAL
CONSTRUCTION SERVICES
DRILLING
LANDSCAPE ARCHITECTURE

| No. | Date | Revision | By |
|---|---|---|---|
| 01 | 01-14-2020 | ADDENDUM 001 | DAW |

# ELECTRICAL PLAN - AREA 01
# JOINING JORDAN - PROJECT #MSC 218022-CPF
## EAST JORDAN DDA

| | |
|---|---|
| Date Issued: | 12/23/2019 |
| Date Surveyed: | 09/09/2019 |
| Designed By: | KDH |
| Drawn By: | DAW |
| Checked By: | KSK |
| Scale: | AS NOTED |

Original sheet size is 22x34

Location:
SECTION 23
T32N R07W
CHARLEVOIX COUNTY
MICHIGAN

Project Number:
2019510004.03

Sheet:
E1


J:\2019510004 GOoseberrie\CD\2019510004-PS-Utility.dwg Tab: E1 ELECTRICAL PLAN - AREA 01 Saved by kdingranck 1/13/2020 7:49 PM Plotted by Dorise A Wirtz, PLS,ASLA 1/13/2020 11:41 PM

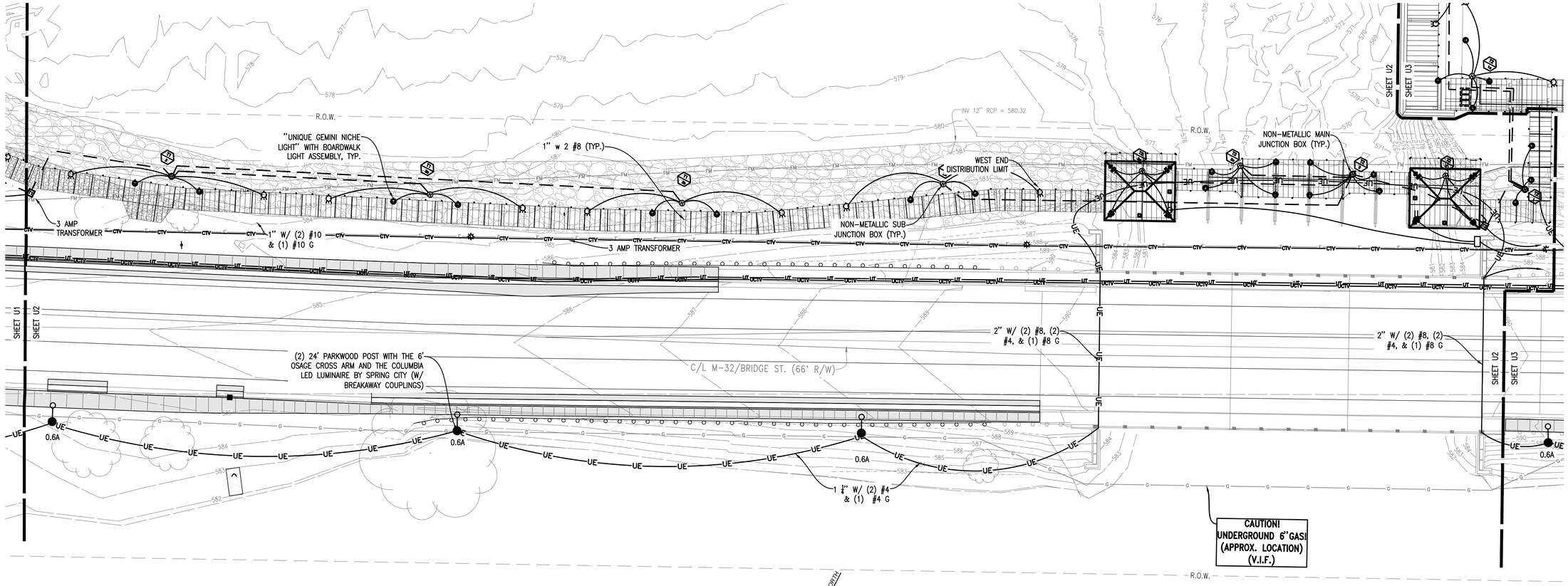


## UTILITY PLAN AREA 02

SCALE: 1" = 20'

SCALE 1" = 20'

0' 20' 40'

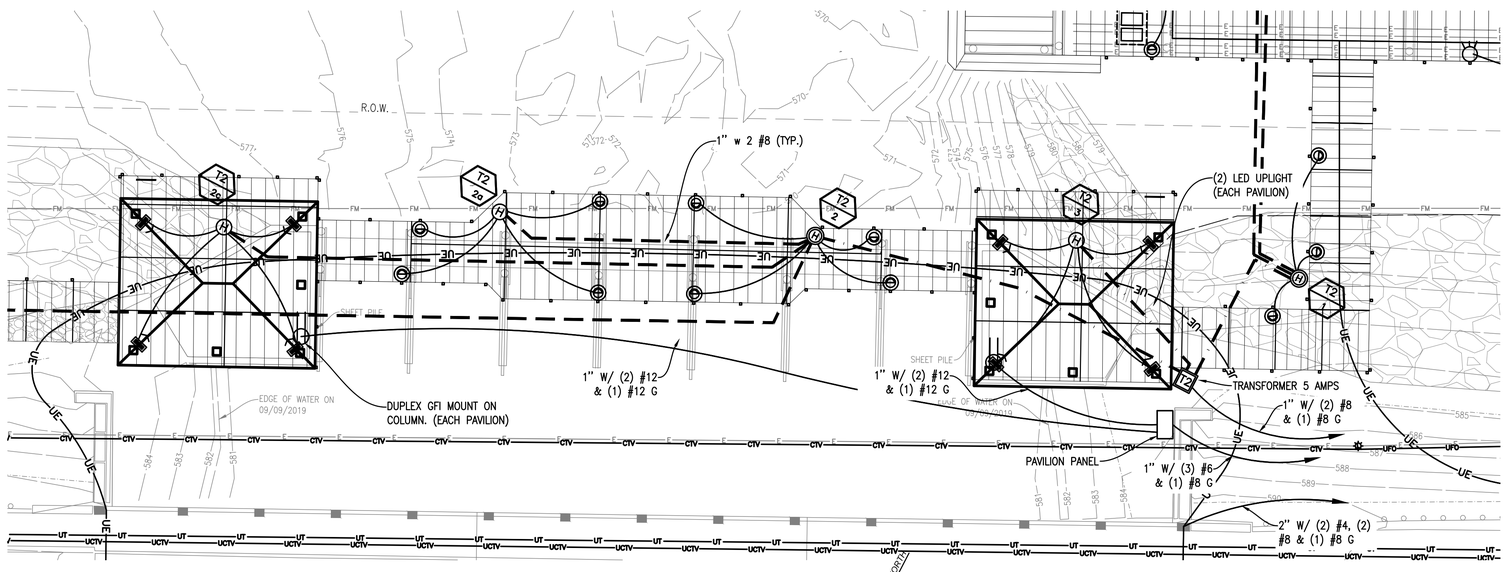


## PAVILION ELEC. PLAN

SCALE: 1" = 10'

SCALE 1" = 10'

0' 10' 20'

## General Legend

- PROJECT LIMITS
- EDGE OF WATER
- EX EDGE OF GRAVEL
- EX EDGE OF CONCRETE
- EX OVERHEAD ELECTRIC
- EX UNDERGROUND ELECTRIC
- EX UNDERGROUND GAS
- EX SANITARY SEWER LINE
- EX SANITARY FORCEMAIN
- EX STORM SEWER LINE
- EX CONCRETE CURB
- EX WOOD BOLLARD
- EX CONIFEROUS TREE
- EX DECIDUOUS TREE
- PROP. EDGE OF ASPHALT
- PROP. EDGE OF CONCRETE
- PROP. OVERHEAD ELECTRIC
- PROP. UNDERGROUND ELEC.
- PROP. STORM SEWER LINE
- PROP. CONCRETE CURB

1 NOTES ON LOW VOLTAGE LIGHTING DISTRIBUTION SYSTEM, UPLIGHTS FOR THE PAVILIONS HAVE BEEN INCLUDED, AND OTHER CHANGES HAVE BEEN MADE ON THIS SHEET.

811 Know what's below. Call before you dig.

THE LOCATION OF THE EXISTING UTILITIES, AS SHOWN ON THIS PLAN, ARE APPROXIMATE ONLY. IT SHALL BE THE RESPONSIBILITY OF THE CONTRACTOR TO VERIFY ACTUAL LOCATION AND DEPTH OF ALL EXISTING UTILITIES. THE OWNER AND THE SURVEYOR SHALL NOT BE RESPONSIBLE FOR ANY OMISSION OR VARIATION FROM THE LOCATION SHOWN. THE CONTRACTOR SHALL NOTIFY "MISS DIG" AT 1 (800) 482-7171 OR 811 THREE (3) WORKING DAYS PRIOR TO THE START OF CONSTRUCTION.


Gosling Czubak
engineering sciences, inc.
1280 Business Park Dr.
Traverse City, Michigan
231-946-9191 phone
info@goslingczubak.com
www.goslingczubak.com


CIVIL ENGINEERING
SURVEYING
ENVIRONMENTAL SERVICES
GEOTECHNICAL
CONSTRUCTION SERVICES
DRILLING
LANDSCAPE ARCHITECTURE

| No. | Date | Revision | By |
|---|---|---|---|
| 01 | 01-14-2020 | ADDENDUM 001 | DAW |

# ELECTRICAL PLAN - AREA 02
# JOINING JORDAN - PROJECT #MSC 218022-CPF
EAST JORDAN DDA

| | |
|---|---|
| Date Issued: | 12/23/2019 |
| Date Surveyed: | 09/09/2019 |
| Designed By: | KDH |
| Drawn By: | DAW |
| Checked By: | KSK |
| Scale: | AS NOTED |

Original sheet size is 22x34

Location:
SECTION 23
T32N R07W
CHARLEVOIX COUNTY
MICHIGAN
---

Project Number:
2019510004.03

Sheet:
E2

P:\2019510004\Drawings\Layout\DDA\2019510004-PS-Utility.dwg Tab: E2 ELECTRICAL PLAN - AREA 02 Saved by kskingsland, 1/13/2020 7:49 PM Plotted by Dallas A. Wirth, PLA ASLA 1/13/2020 11:41 PM

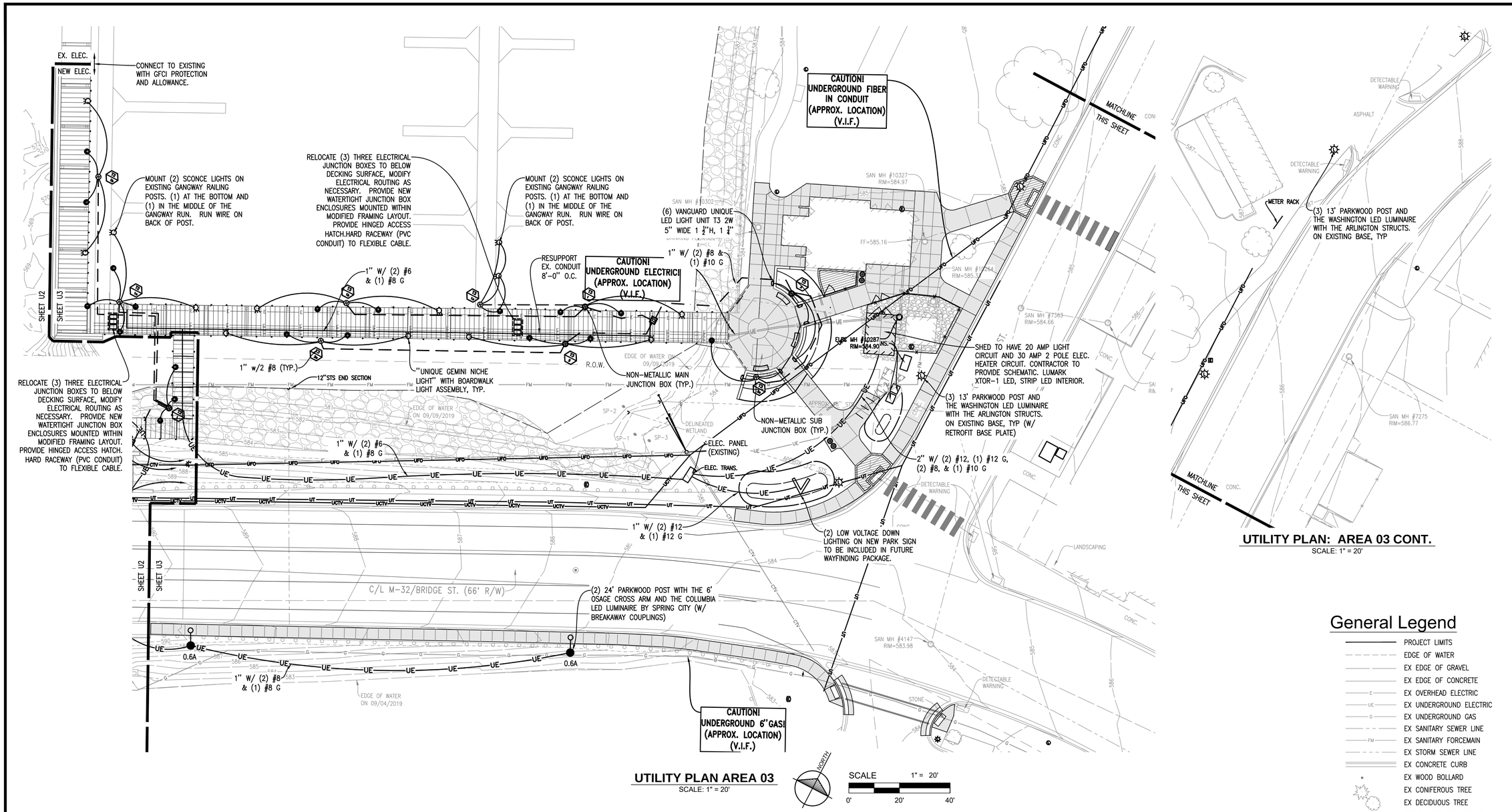


## UTILITY PLAN AREA 03

SCALE: 1" = 20'

## UTILITY PLAN: AREA 03 CONT.

SCALE: 1" = 20'

## General Legend

- PROJECT LIMITS
- EDGE OF WATER
- EX EDGE OF GRAVEL
- EX EDGE OF CONCRETE
- E — EX OVERHEAD ELECTRIC
- UE — EX UNDERGROUND ELECTRIC
- G — EX UNDERGROUND GAS
- EX SANITARY SEWER LINE
- FM — EX SANITARY FORCEMAIN
- EX STORM SEWER LINE
- EX CONCRETE CURB
- EX WOOD BOLLARD
- EX CONIFEROUS TREE
- EX DECIDUOUS TREE
- PROP. EDGE OF ASPHALT
- PROP. EDGE OF CONCRETE
- E — PROP. OVERHEAD ELECTRIC
- UE — PROP. UNDERGROUND ELEC.
- PROP. STORM SEWER LINE
- PROP. CONCRETE CURB

1 NOTES ON LOW VOLTAGE LIGHTING DISTRIBUTION SYSTEM, LIGHT CHANGE OUT, AND OTHER CHANGES HAVE BEEN MADE ON THIS SHEET.

811 Know what's below. Call before you dig.

THE LOCATION OF THE EXISTING UTILITIES, AS SHOWN ON THIS PLAN, ARE APPROXIMATE ONLY. IT SHALL BE THE RESPONSIBILITY OF THE CONTRACTOR TO VERIFY ACTUAL LOCATION AND DEPTH OF ALL EXISTING UTILITIES. THE OWNER AND THE SURVEYOR SHALL NOT BE RESPONSIBLE FOR ANY OMISSION OR VARIATION FROM THE LOCATION SHOWN. THE CONTRACTOR SHALL NOTIFY "MISS DIG" AT 1 (800) 482-7171 OR 811 THREE (3) WORKING DAYS PRIOR TO THE START OF CONSTRUCTION.


GoslingCzubak
engineering sciences, inc.
1280 Business Park Dr.
Traverse City, Michigan
231-946-9191 phone
info@goslingczubak.com
www.goslingczubak.com


CIVIL ENGINEERING
SURVEYING
ENVIRONMENTAL SERVICES
GEOTECHNICAL
CONSTRUCTION SERVICES
DRILLING
LANDSCAPE ARCHITECTURE

| No. | Date | Revision | By |
|---|---|---|---|
| 01 | 01-14-2020 | ADDENDUM 001 | DAW |

# ELECTRICAL PLAN - AREA 03
# JOINING JORDAN - PROJECT #MSC 218022-CPF
## EAST JORDAN DDA

| | |
|---|---|
| Date Issued: | 12/23/2019 |
| Date Surveyed: | 09/09/2019 |
| Designed By: | KDH |
| Drawn By: | DAW |
| Checked By: | KSK |
| Scale: | AS NOTED |

Original sheet size is 22x34

Location:
SECTION 23
T32N R07W
CHARLEVOIX COUNTY
MICHIGAN
---

Project Number:
2019510004.03

Sheet:
**E3**


I:\2019510004 Octoads-state\CD\2019510004-PS-MPU.dwg Tab: E3 ELECTRICAL PLAN - AREA 03 Saved by: kaingarnick 1/13/2020 7:48 PM Plotted by: Dallas A. Witte, PLA, ASLA 1/13/2020 11:41 PM

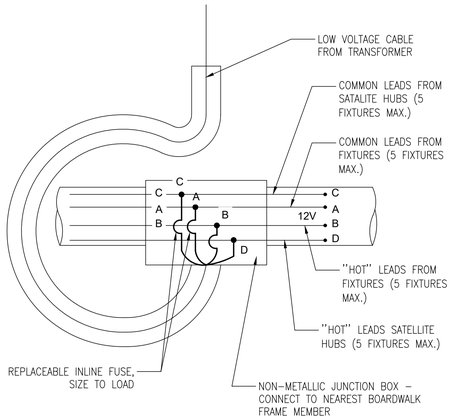


## SUB JUNCTION BOX DETAIL

SCALE: NTS

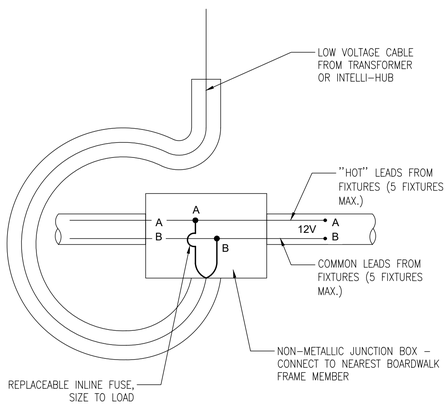


## MAIN JUNCTION BOX DETAIL

SCALE: NTS

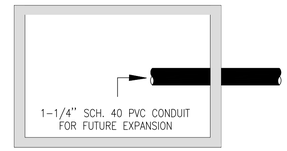


12"x18"x12" DEEP QUAZITE BOX HAND HOLE AT GRADE LEVEL QUAZITE 12"x18"x12" DEEP W/ TYPE 3 "ELECTRIC" LABELED COVER. CIRCUIT AS SHOWN ON DRAWINGS.

## TYPICAL QUAZITE GROUNDBOX WIRING DETAIL

SCALE: NTS

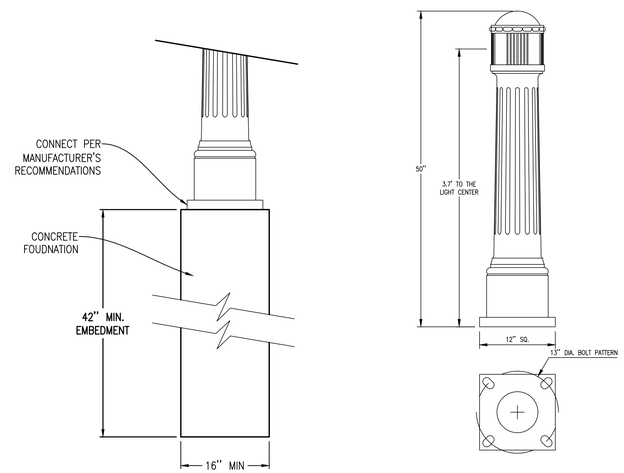


## BOLLARD FOUNDATION DETAIL

SCALE: 1/2" = 1'-0"

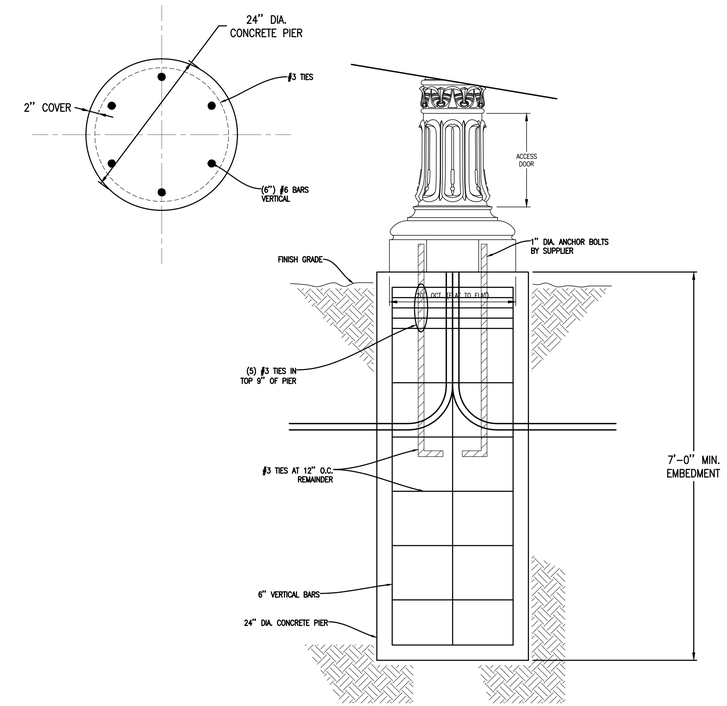


## LIGHT POLE FOUNDATION DETAILS

SCALE: 1" = 1'-0"

| PANEL PAVILIONS | | | | | |
|---|---|---|---|---|---|
| 60 AMP MLO 240/120 VOLT 1 PHASE 3 WIRE SURFACE MOUNT TOP FEED NEMA 3R 22K AIC | | | | | |
| CIR. | DESCRIPTION | BREAKER | BREAKER | DESCRIPTION | CIR. |
| 1 | WEST PAVILION GFCI RECEPTACLE | 1P20 | 1P20 | EAST PAVILION GFCI RECEPTACLE | 2 |
| 3 | | | | | 4 |
| 5 | | | | | 6 |
| 7 | | | | | 8 |
| 9 | | | | | 10 |
| 11 | | | | | 12 |
| | | | | | |

## PAVILION ELEC. PANEL

SCALE: NTS

| | PANEL M-32 EAST SIDE (EXISTING) | | | | | |
|---|---|---|---|---|---|---|
| | 200 AMP MCB 240/120 VOLT 1 PHASE 3 WIRE SURFACE MOUNT TOP FEED NEMA 3R SERVICE ENTRANCE RATED 22K AIC | | | | | |
| | CIR. | DESCRIPTION | BREAKER | BREAKER | DESCRIPTION | CIR. | |
| | 1 | **SOUTH LIGHTS** | **2P20** | **1P20** | **CONVENIENCE RECEPTACLE** | 2 | |
| | 3 | | | 2P60 | PAVILION SUBPANEL | 4 | ** |
| | 5 | **NORTH LIGHTS** | **2P20** | | | 6 | |
| | 7 | | | 2P30 | M-32 BRIDGE LIGHTING VIA CONTACTOR | 8 | ** |
| | 9 | **SURGE PROTECTIVE DEVICE (SPD)** | **2P20** | | | 10 | |
| | 11 | | | 2P30 | M-32 STREET LIGHTING VIA CONTACTOR | 12 | |
| ** | 13 | ACCENT LIGHTING VIA CONTACTOR | 1P20 | | | 14 | |
| | 15 | SHED HEAT | 2P30 | 1P20 | SHED LIGHT, RECEPTACLE | 16 | |
| | 17 | | | | | 18 | |
| | 19 | | | | | 20 | |
| | 21 | | | | | 22 | |
| | 23 | | | | | 24 | |
| | 25 | | | | | 26 | |
| | 27 | | | | | 28 | |
| | 29 | | | | | 30 | |
| | | | | | | | |
| | | **BOLD INDICATE EXISTING TO REMAIN** | | | | | |
| | | ** PROVISIONS REQUIRED TO CONNECT CONDUCTORS OVERSIZED TO COMPENSATE FOR VOLTAGE DROP | | | | | |

## EAST SIDE ELEC. PANEL

SCALE: NTS

| | PANEL M-32 WEST SIDE (NEW) | | | | | |
|---|---|---|---|---|---|---|
| | 200 AMP MCB 240/120 VOLT 1 PHASE 3 WIRE SURFACE MOUNT TOP FEED NEMA 3R SERVICE ENTRANCE RATED 22K AIC | | | | | |
| | CIR. | DESCRIPTION | BREAKER | BREAKER | DESCRIPTION | CIR. | |
| ** | 1 | ACCENT LIGHTING VIA CONTACTOR | 1P20 | 1P20 | CONVENIENCE RECEPTACLE | 2 | |
| | 3 | BOARDWALK RECEPTACLE | 1P20 | 2P30 | BOARDWALK LIGHTING VIA CONTACTOR | 4 | ** |
| | 5 | | | | | 6 | |
| | 7 | | | | | 8 | |
| | 9 | | | | | 10 | |
| | 11 | | | | | 12 | |
| | 13 | | | | | 14 | |
| | 15 | | | | | 16 | |
| | 17 | | | | | 18 | |
| | 19 | | | | | 20 | |
| | 21 | | | | | 22 | |
| | 23 | | | | | 24 | |
| | 25 | | | | | 26 | |
| | 27 | SURGE PROTECTIVE DEVICE (SPD) | 2P20 | | | 28 | |
| | 29 | | | | | 30 | |
| | | | | | | | |
| | | ** PROVISIONS REQUIRED TO CONNECT CONDUCTORS OVERSIZED TO COMPENSATE FOR VOLTAGE DROP | | | | | |

## WEST SIDE ELEC. PANEL

SCALE: NTS


Gosling Czubak
engineering sciences, inc.
1280 Business Park Dr.
Traverse City, Michigan
231-946-9191 phone
info@goslingczubak.com
www.goslingczubak.com


CIVIL ENGINEERING
SURVEYING
ENVIRONMENTAL SERVICES
GEOTECHNICAL
CONSTRUCTION SERVICES
DRILLING
LANDSCAPE ARCHITECTURE

| No. | Date | Revision | By |
|---|---|---|---|
| 01 | 01-14-2020 | ADDENDUM 001 | DAW |

# ELECTRICAL DETAILS AND TABLES
# JOINING JORDAN - PROJECT #MSC 218022-CPF
EAST JORDAN DDA

Date Issued: 12/23/2019
Date Surveyed: 09/09/2019
Designed By: KDH
Drawn By: DAW
Checked By: KSK
Scale: AS NOTED

Original sheet size is 22x34

Location:
SECTION 23
T32N R07W
CHARLEVOIX COUNTY
MICHIGAN
---

Project Number:
2019510004.03

Sheet:
E4

P:\2019\10004.00\cadd-data\CD\2019510004-PS-Utility.dwg Tab: E4 ELECTRICAL DETAILS AND TABLES Saved by kalongstreet 11/12/2021 7:48 PM Plotted by: Dallas A. Wirtz, PLA, ASLA 11/12/2021 11:41 PM

## TRANSFORMER 1

| WIRING INFO | | | | | Vd FORMULA | | | | | | | | | | | TRANSFORMER LOAD | | | | |
|---|---|---|---|---|---|---|---|---|---|---|---|---|---|---|---|---|---|---|---|---|
| RUN | WIRING METHOD | WIRE SIZE | TOTAL LAMP WATTAGE ON THE WIRE RUN | LAMP VOLTAGE | AMP LOAD | X | LENGTH OF WIRE | X | 2 | X | RESISTANCE PER FOOT | = | VOLTAGE DROP | TAP TO USE | VOTLAGE AT HUB | AMP LOAD | X | TAP NEEDED | = | ACTUAL WATTAGE |
| 1 | INTELL-HUB | 12 | 54 | 12 | 4.50 | | 62 | | | | 0.00162 | | 0.90 | 13 | 12.10 | 4.50 | | 13 | | 59 |
| 1a | S-HUB | 12 | 15 | 12 | 1.25 | | 127 | | | | 0.00162 | | 0.51 | | 11.58 | | | | | |
| 1b | S-HUB | 12 | 12 | 12 | 1.00 | | 107 | | | | 0.00162 | | 0.35 | | 11.75 | | | | | |
| 1c | S-HUB | 12 | 12 | 12 | 1.00 | | 59 | | | | 0.00162 | | 0.19 | | 11.90 | | | | | |
| 2 | INTELL-HUB | 12 | 36 | 12 | 3.00 | | 61 | | | | 0.00162 | | 0.59 | 12 | 11.41 | 3.00 | | 12 | | 36 |
| 2a | S-HUB | 12 | 12 | 12 | 1.00 | | 96 | | | | 0.00162 | | 0.31 | | 11.10 | | | | | |
| 2b | S-HUB | 12 | 12 | 12 | 1.00 | | 191 | | | | 0.00162 | | 0.62 | | 10.79 | | | | | |
| | | | | | | | | | | | | | | | | | | TOTAL ACTUAL WATTAGE | | 95 |
| | | | | | | | | | | | | | | | | | | TRANSFORMER SIZE | | 300 |

AVAILABLE TRANSFORMER TAPS

150- 12, 13, 14, 15
300- 12, 13
360- 12, 13, 14, 15
500- 12, 13, 14, 15, 16, 17
200 -12,15
840- 12, 13, 14, 15, 16, 17, 18, 19, 20
1120- 12, 13, 14, 15, 16, 17, 18, 19, 20, 21, 22
600- 12, 13, 14, 15, 16, 17

RECOMMENDED MAXIMUM AMPERAGE FOR WIRE

#14 12 AMPS
#12 16 AMPS
#10 24 AMPS
#8 24 AMPS

WIRE RESISTANCE PER FOOT

#18 0.00638
#16 0.00401
#14 0.00252
#12 0.00162
#10 0.00108
#8 0.00064
#6 0.00039
#4 0.00024

## TRANSFORMER 2

| WIRING INFO | | | | | Vd FORMULA | | | | | | | | | | | TRANSFORMER LOAD | | | | |
|---|---|---|---|---|---|---|---|---|---|---|---|---|---|---|---|---|---|---|---|---|
| RUN | WIRING METHOD | WIRE SIZE | TOTAL LAMP WATTAGE ON THE WIRE RUN | LAMP VOLTAGE | AMP LOAD | X | LENGTH OF WIRE | X | 2 | X | RESISTANCE PER FOOT | = | VOLTAGE DROP | TAP TO USE | VOTLAGE AT HUB | AMP LOAD | X | TAP NEEDED | = | ACTUAL WATTAGE |
| 1 | INTELL-HUB | 12 | 39 | 12 | 3.25 | | 22 | | | | 0.00162 | | 0.23 | 12 | 11.77 | 3.25 | | 12 | | 39 |
| 1a | S-HUB | 12 | 18 | 12 | 1.50 | | 58 | | | | 0.00162 | | 0.28 | | 11.49 | | | | | |
| 1b | S-HUB | 12 | 12 | 12 | 1.00 | | 115 | | | | 0.00162 | | 0.37 | | 11.40 | | | | | |
| 2 | INTELL-HUB | 12 | 48 | 12 | 4.00 | | 51 | | | | 0.00162 | | 0.66 | 13 | 12.34 | 4.00 | | 13 | | 52 |
| 2a | S-HUB | 12 | 12 | 12 | 1.00 | | 41 | | | | 0.00162 | | 0.13 | | 12.21 | | | | | |
| 2b | S-HUB | 12 | 12 | 12 | 1.00 | | 158 | | | | 0.00162 | | 0.51 | | 10.88 | | | | | |
| 2c | S-HUB | 12 | 12 | 12 | 1.00 | | 78 | | | | 0.00162 | | 0.25 | | 12.09 | | | | | |
| 3 | S-HUB | 12 | 12 | 12 | 1.00 | | 22 | | | | 0.00162 | | 0.07 | 13 | 12.93 | 1.00 | | 13 | | 13 |
| | | | | | | | | | | | | | | | | | | TOTAL ACTUAL WATTAGE | | 104 |
| | | | | | | | | | | | | | | | | | | TRANSFORMER SIZE | | 300 |

AVAILABLE TRANSFORMER TAPS

150- 12, 13, 14, 15
300- 12, 13
360- 12, 13, 14, 15
500- 12, 13, 14, 15, 16, 17
200 -12,15
840- 12, 13, 14, 15, 16, 17, 18, 19, 20
1120- 12, 13, 14, 15, 16, 17, 18, 19, 20, 21, 22
600- 12, 13, 14, 15, 16, 17

RECOMMENDED MAXIMUM AMPERAGE FOR WIRE

#14 12 AMPS
#12 16 AMPS
#10 24 AMPS
#8 24 AMPS

WIRE RESISTANCE PER FOOT

#18 0.00638
#16 0.00401
#14 0.00252
#12 0.00162
#10 0.00108
#8 0.00064
#6 0.00039
#4 0.00024

## TRANSFORMER 3

| WIRING INFO | | | | | Vd FORMULA | | | | | | | | | | | TRANSFORMER LOAD | | | | |
|---|---|---|---|---|---|---|---|---|---|---|---|---|---|---|---|---|---|---|---|---|
| RUN | WIRING METHOD | WIRE SIZE | TOTAL LAMP WATTAGE ON THE WIRE RUN | LAMP VOLTAGE | AMP LOAD | X | LENGTH OF WIRE | X | 2 | X | RESISTANCE PER FOOT | = | VOLTAGE DROP | TAP TO USE | VOTLAGE AT HUB | AMP LOAD | X | TAP NEEDED | = | ACTUAL WATTAGE |
| 1 | INTELL-HUB | 12 | 30 | 12 | 2.50 | | 26 | | | | 0.00162 | | 0.21 | 12 | 11.79 | 2.50 | | 12 | | 30 |
| 1a | S-HUB | 12 | 9 | 12 | 0.75 | | 39 | | | | 0.00162 | | 0.09 | | 11.69 | | | | | |
| 1b | S-HUB | 12 | 12 | 12 | 1.00 | | 96 | | | | 0.00162 | | 0.31 | | 11.48 | | | | | |
| 2 | INTELL-HUB | 12 | 24 | 12 | 2.00 | | 37 | | | | 0.00162 | | 0.24 | 12 | 11.76 | 2.00 | | 12 | | 24 |
| 2a | S-HUB | 12 | 12 | 12 | 1.00 | | 99 | | | | 0.00162 | | 0.32 | | 11.44 | | | | | |
| 3 | INTELL-HUB | 12 | 39 | 12 | 3.25 | | 65 | | | | 0.00162 | | 0.68 | 12 | 11.32 | 3.25 | | 12 | | 39 |
| 3a | S-HUB | 12 | 15 | 12 | 1.25 | | 56 | | | | 0.00162 | | 0.23 | | 11.09 | | | | | |
| | | | | | | | | | | | | | | | | | | TOTAL ACTUAL WATTAGE | | 93 |
| | | | | | | | | | | | | | | | | | | TRANSFORMER SIZE | | 300 |

AVAILABLE TRANSFORMER TAPS

150- 12, 13, 14, 15
300- 12, 13
360- 12, 13, 14, 15
500- 12, 13, 14, 15, 16, 17
200 -12,15
840- 12, 13, 14, 15, 16, 17, 18, 19, 20
1120- 12, 13, 14, 15, 16, 17, 18, 19, 20, 21, 22
600- 12, 13, 14, 15, 16, 17

RECOMMENDED MAXIMUM AMPERAGE FOR WIRE

#14 12 AMPS
#12 16 AMPS
#10 24 AMPS
#8 24 AMPS

WIRE RESISTANCE PER FOOT

#18 0.00638
#16 0.00401
#14 0.00252
#12 0.00162
#10 0.00108
#8 0.00064
#6 0.00039
#4 0.00024

## ELECTRICAL SYMBOL LEGEND

| | SYMBOL | TYPE | QTY. |
|---|---|---|---|
| | | PRINCETON BOLLARD BY SPRING CITY | 8 |
| | | LUMARK XTOR-1 LED | 1 |
| | | STANDARD LIGHT POLE, BY SPRING CITY | 6 |
| | | 24' MAST ARM POLE, BY SPRING CITY | 7 |
| | T1 | TRANSFORMER | 3 |
| | H | NON-METALIC LOW VOLTAGE MAIN JUNCTION BOX | 7 |
| | H | NON-METALIC LOW VOLTAGE SUB JUNCTION BOX | 15 |
| * | | UNIQUE, GEMINI = GEMI-12-L2<br>CAST BRASS, HALF-SPHERE SHROUD, FROSTED LENS,<br>25' WIRE LEAD, FLEX SERIES 2 WATT LED | 47 |
| * | | UNIQUE, GEMINI = GEMI-NL-50<br>CAST BRASS, HALF-SPHERE SHROUD, FROSTED LENS,<br>50' WIRE LEAD, NEEDS FLEX SERIES LED<br>MODEL# LED-2W-T330K-12 | 23 |
| * | | UNIQUE, STELLAR = STEL-12-L2)<br>CAST BRASS, GLARE CONTROL LENS KIT, PVC MOUNTING<br>STAKE, 25' WIRE LEAD, FLEX SERIES 2 WATT LED | 8 |
| * | | UNIQUE, VANGUARD8 = VAB8-12-L2<br>BRASS, RECTANGULAR SHROUD, FROSTED LENS,<br>25' WIRE LEAD, FLEX SERIES 2 WATT LED | 6 |
| * | | UNIQUE, VOYAGER8 = VO8L-12-L2<br>PBT MOLDED HOUSING, BRASS FACE PLATE,<br>25' WIRE LEAD, FLEX SERIES 2 WATT LED | 4 |

* DENOTES LOW VOLTAGE LIGHTING


GoslingCzubak
engineering sciences, inc.
1280 Business Park Dr.
Traverse City, Michigan
231-946-9191 phone
info@goslingczubak.com
www.goslingczubak.com


CIVIL ENGINEERING
SURVEYING
ENVIRONMENTAL SERVICES
GEOTECHNICAL
CONSTRUCTION SERVICES
DRILLING
LANDSCAPE ARCHITECTURE

| No. | Date | Revision | By |
|---|---|---|---|
| 01 | 01-14-2020 | ADDENDUM 001 | DAW |

# ELECTRICAL DETAILS AND TABLES
# JOINING JORDAN - PROJECT #MSC 218022-CPF
EAST JORDAN DDA

Date Issued: 12/23/2019
Date Surveyed: 09/09/2019
Designed By: KDH
Drawn By: DAW
Checked By: KSK
Scale: AS NOTED

Original sheet size is 22x34

Location:
SECTION 23
T32N R07W
CHARLEVOIX COUNTY
MICHIGAN
---

Project Number:
2019510004.03

Sheet:
E5


J:\2019510004.00\cads-start\CD\2019510004.00-ESB.dwg Tab: E3 ELECTRICAL DETAILS AND TABLES Saved by kenrogalski 1/13/2020 7:49 PM Plotted by Dallas A. Wirth PLA, ASLA 1/13/2020 1:11 PM

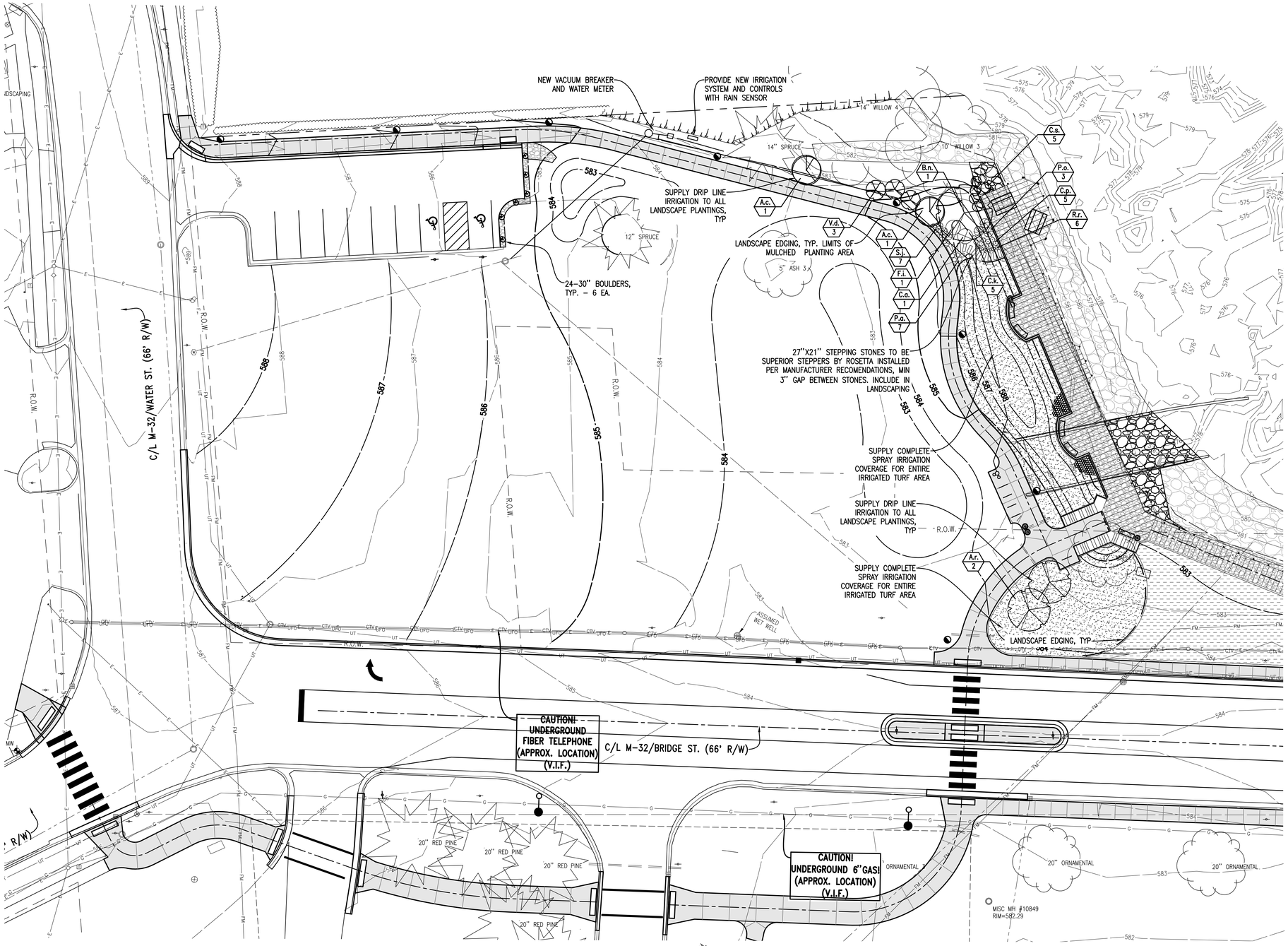


## General Legend

- PROJECT LIMITS
- EDGE OF WATER
- EX EDGE OF GRAVEL
- EX EDGE OF CONCRETE
- EX OVERHEAD ELECTRIC
- EX CONCRETE CURB
- EX WOOD BOLLARD
- EX CONIFEROUS TREE
- EX DECIDUOUS TREE
- PROP. EDGE OF ASPHALT
- PROP. EDGE OF CONCRETE
- 576 EX. CONTOUR
- 584 PROP. CONTOUR

## Landscape Legend

- IRRIGATED TURF
- NO-MOW GRASS

**LANDSCAPE PLAN - AREA 01**
SCALE: 1" = 20'

NORTH

SCALE 1" = 20'
0' 20' 40'


GoslingCzubak
engineering sciences, inc.
1280 Business Park Dr.
Traverse City, Michigan
231-946-9191 phone
info@goslingczubak.com
www.goslingczubak.com


CIVIL ENGINEERING
SURVEYING
ENVIRONMENTAL SERVICES
GEOTECHNICAL
CONSTRUCTION SERVICES
DRILLING
LANDSCAPE ARCHITECTURE

| No. | Date | Revision | By |
|---|---|---|---|

# LANDSCAPE & IRRIGATION PLAN - AREA 01
# JOINING JORDAN - PROJECT #MSC 218022-CPF
EAST JORDAN DDA

| | |
|---|---|
| Date Issued: | 12/23/2019 |
| Date Surveyed: | 09/09/2019 |
| Designed By: | KDH |
| Drawn By: | DAW |
| Checked By: | KSK |
| Scale: | AS NOTED |

Original sheet size is 22x34

Location:
SECTION 23
T32N R07W
CHARLEVOIX COUNTY
MICHIGAN
---

Project Number:
2019510004.03

Sheet:
**L1**

P:\2019\10004.00\cads-data\CD\2019510004-PS-Landscape.dwg Tab: L1 LANDSCAPE & IRRIGATION PLAN - AREA 01 Saved by: dawntz 1/13/2020 11:28 PM Plotted by: Dallas A. Witz, PLA, ASLA 1/13/2020 11:41 PM

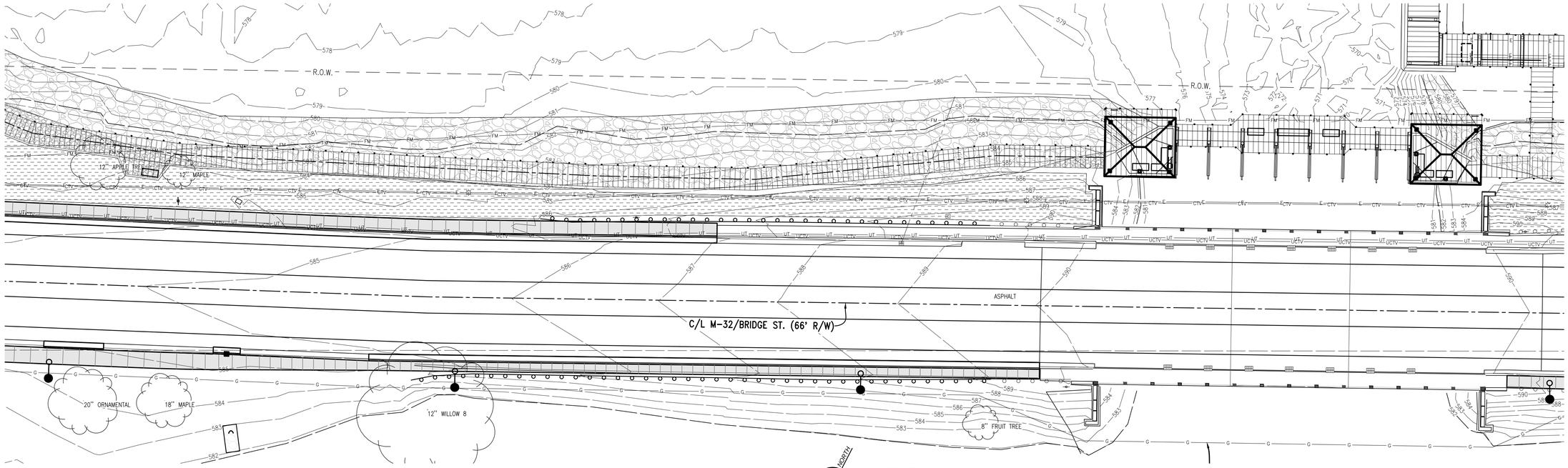


## LANDSCAPE PLAN - AREA 02

SCALE: 1" = 20'

NORTH

SCALE 1" = 20'

0' 20' 40'

| Key | Botanical Name<br>Common Name | Min. Size Required | Qty. | Notes |
|---|---|---|---|---|
| | **DECIDUOUS TREES** | | | |
| A.r. | *Acer rubrum ' October Glory'* | 2.5" Cal. B&B | 3 | |
| | 'October Glory' Red Maple | | | |
| B.n. | *Betula nigra* | 7' Ht. B&B | 1 | Multi-Stem (Min. 3 Stem) |
| | River Birch | | | |
| A.c. | *Amelanchier canadensis* | 7' Ht. B&B | 5 | Multi-Stem (Min. 3 Stem) |
| | Shadblow Serviceberry | | | |
| | | | | |
| | **EVERGREEN TREES** | | | |
| T.d. | *Taxodium distichum* | 8' Ht. B&B | 2 | |
| | Bald Cypress | | | |
| | | | | |
| | **DECIDUOUS SHRUBS** | | | |
| V.d. | *Viburnum dentatum* | #5 Pot | 3 | |
| | Arrowwood Viburnum | | | |
| F.i. | *Forsythia x intermedia* | #5 Pot | 9 | |
| | Border Forsythia | | | |
| P.o. | *Physocarpus opulifolius* | #5 Pot | 22 | |
| | Common Ninebark | | | |
| C.s. | *Cornus sericea 'Insanti'* | #5 Pot | 20 | |
| | 'Insanti' Red Osier Dogwood | | | |
| S.j. | *Spiraea japonica* | #3 Pot | 14 | |
| | Japanese Spirea | | | |
| C.a. | *Cornus amomum* | #5 Pot | 1 | |
| | Silky Dogwood | | | |
| R.r. | *Rosa 'Radtkopink'* | #3 Pot | 6 | |
| | Knockout Rose | | | |
| H.t. | *Hylotelephium telephium 'Autumn Joy'* | #3 Pot | 49 | |
| | Autumn Joy Sedum | | | |
| | | | | |
| | **EVERGREEN SHRUBS** | | | |
| C.p. | *Chamaecyparis pisifera 'Golden Mop'* | #3 Pot | 5 | |
| | Gold Mop Threadleaf False Cypress | | | |
| | | | | |
| | **GRASSES** | | | |
| P.a. | *Pennisetum alopecuroides 'Hameln'* | #1 Pot | 87 | |
| | Dwarf Fountain Grass | | | |
| C.k. | *Calamagrostis x acutiflora ' Karl Foerster'* | #1 Pot | 34 | |
| | Feather Reed Grass | | | |
| | | | | |
| | **GROUNDCOVER** | | | |
| J.h. | *Juniperus horizontalis 'Wiltonii'* | #1 Pot | 78 | |
| | Blue Rug Juniper | | | |

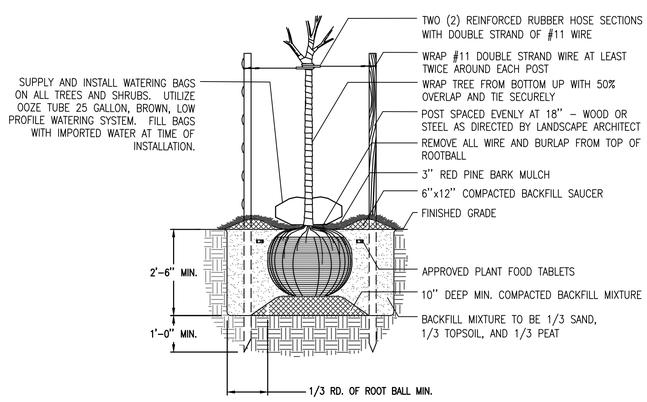


## TREE INSTALLATION DETAIL

NOT TO SCALE

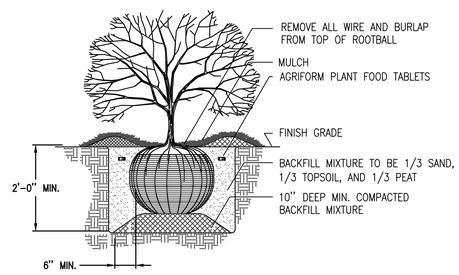


## SHRUB INSTALLATION DETAIL

NOT TO SCALE

## General Legend

- PROJECT LIMITS
- EDGE OF WATER
- EX EDGE OF GRAVEL
- EX EDGE OF CONCRETE
- EX OVERHEAD ELECTRIC
- EX CONCRETE CURB
- EX WOOD BOLLARD
- EX CONIFEROUS TREE
- EX DECIDUOUS TREE
- PROP. EDGE OF ASPHALT
- PROP. EDGE OF CONCRETE
- 576 EX. CONTOUR
- 584 PROP. CONTOUR

## Landscape Legend

- IRRIGATED TURF
- NO-MOW GRASS

## General Landscape Notes

1. CONTRACTOR SHALL ADEQUATELY DELINEATE PLANTING AREAS WITH MARKING PAINT OR OTHER APPROVED METHOD PRIOR TO INSTALLATION FOR APPROVAL BY LANDSCAPE ARCHITECT.
2. REFER TO SPECIFICATION 02950 FOR LANDSCAPING INSTALLATION INFORMATION.
3. IN CASE OF A DISCREPANCY, THE NUMBER OF TREE/SHRUB SYMBOLS SHOWN ON THE PLANS SHALL TAKE PRECEDENCE OVER QUANTITY ON NUMERICAL LABEL OR PLANT SCHEDULE.
4. PROVIDE A MINIMUM 3" DEPTH OF RED PINE LANDSCAPE MULCH (EQUAL TO RED PINE MULCH FROM TRAVERSE OUTDOOR, TRAVERSE CITY, MI) IN ALL PLANTING BEDS AS INDICATED ON PLANS. SUBMIT A SAMPLE OF THE MULCH TO THE LANDSCAPE ARCHITECT FOR APPROVAL PRIOR TO INSTALLATION. FINISHED GRADE OF MULCH SHALL BE FLUSH WITH GRADE OF ALL ADJACENT PAVING AND CURBS TO ALLOW FOR SETTLING.
5. THE LANDSCAPE CONTRACTOR SHALL PROVIDE PLANTING MIX FOR PLANTING MEDIUM FOR THE TREES AND SHRUBS. PROVIDE PLANTING MIX SAMPLE RATIO FOR APPROVAL BY LANDSCAPE ARCHITECT.
6. COORDINATE THE LANDSCAPE INSTALLATION WITH THE INSTALLATION WITH THE FINAL SITE PARKING AND PAVING PLAN. COORDINATE THE LANDSCAPE INSTALLATION TO INSURE VISIBILITY OF ALL TRAFFIC SIGNAGE. COORDINATE THE LANDSCAPE INSTALLATION WITH UTILITY LOCATIONS.
7. STAKE THE LOCATIONS OF ALL TREES AND MASS PLANTING AREAS AND OBTAIN APPROVAL OF THE LANDSCAPE ARCHITECT PRIOR TO INSTALLATION. MAKE MINOR ADJUSTMENTS IN THE TREE LOCATIONS REQUIRED DUE TO UTILITY ITEMS.
8. TREES SHALL BE SELECTED WITH FORMS ADAPTABLE TO PLACEMENT ADJACENT TO SIDEWALKS AND VEHICULAR USE AREAS. TREES SHALL HAVE FORMS ADAPTABLE TO FUTURE PRUNING FOR PEDESTRIAN AND VEHICULAR CLEARANCE.
9. ALL CONTAINER GROWN MATERIAL SHALL BE THOROUGHLY HAND WATERED UPON ARRIVAL, WHILE IN THE CONTAINERS, BEFORE PLANTING. DO NOT BIND OR STRAP THE TRUNKS IN THE REMOVAL FROM THE TRUCKS. PROTECT THE TRUNKS AT ALL TIMES.
10. PROVIDE A MINIMUM 3'-0" DIAMETER TREE WELL WITH A 4" SAUCER FOR ALL TREES LOCATED IN TURF AREAS. PROVIDE 3" DEPTH OF MULCH INSIDE SAUCERS. REVIEW SUBSURFACE DRAINAGE CONDITIONS. INSTALL TREES "HIGH" IF NECESSARY, DUE TO SUBSURFACE CONDITIONS.
11. PRUNE ANY ADDITIONAL TREES AS REQUIRED BY THE LANDSCAPE ARCHITECT, GENERAL CONTRACTOR OR OWNER.
12. ALL MASS PLANTINGS SHALL BE EVENLY SPACED AS SHOWN ON PLANS TO ENSURE EVEN COVERAGE. SET PLANTS OFF CURBS AND WALKS TO PREVENT OVERGROWTH INTO UNWANTED AREAS.


GoslingCzubak
engineering sciences, inc.
1280 Business Park Dr.
Traverse City, Michigan
231-946-9191 phone
info@goslingczubak.com
www.goslingczubak.com


CIVIL ENGINEERING
SURVEYING
ENVIRONMENTAL SERVICES
GEOTECHNICAL
CONSTRUCTION SERVICES
DRILLING
LANDSCAPE ARCHITECTURE

| No. | Date | Revision | By |
|---|---|---|---|

# LANDSCAPE & IRRIGATION PLAN - AREA 02
# JOINING JORDAN - PROJECT #MSC 218022-CPF
EAST JORDAN DDA

| | |
|---|---|
| Date Issued: | 12/23/2019 |
| Date Surveyed: | 09/09/2019 |
| Designed By: | KDH |
| Drawn By: | DAW |
| Checked By: | KSK |
| Scale: | AS NOTED |

Original sheet size is 22x34

Location:
SECTION 23
T32N R07W
CHARLEVOIX COUNTY
MICHIGAN
---

Project Number:
2019510004.03

Sheet:
**L2**


P:\2019\10004.00\cadd-data\CD\2019\10004-PS-Landscape.dwg Tab: L2 LANDSCAPE & IRRIGATION PLAN - AREA 02 Saved by: dawmiz 1/13/2020 11:28 PM Plotted by: Dallas A. Wirtz, PLA, ASLA 1/13/2020 11:41 PM

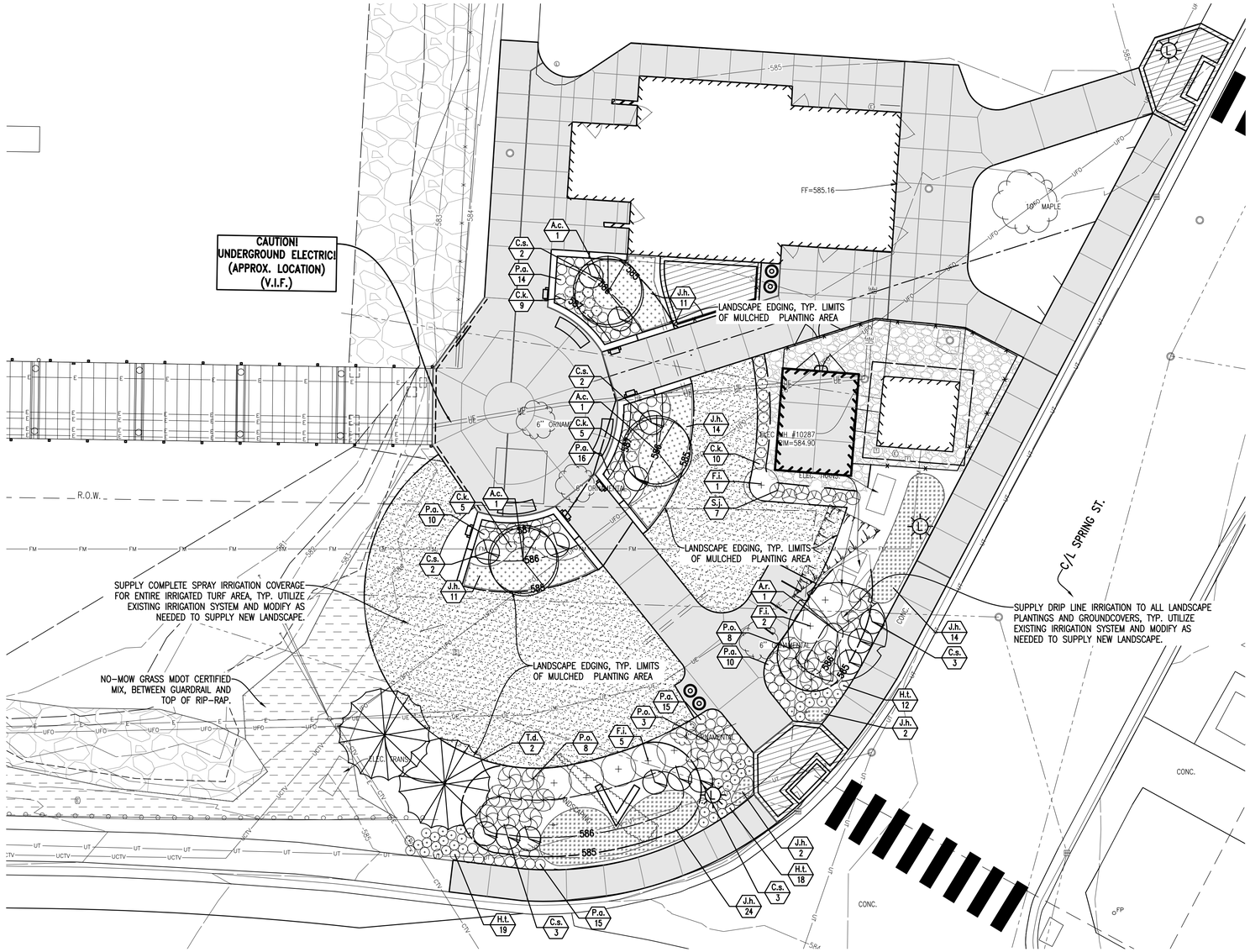


## LANDSCAPE PLAN - AREA 03

SCALE: 1" = 20'

NORTH

SCALE 1" = 10'

0' 10' 20'

## General Legend

- PROJECT LIMITS
- EDGE OF WATER
- EX EDGE OF GRAVEL
- EX EDGE OF CONCRETE
- EX OVERHEAD ELECTRIC
- EX CONCRETE CURB
- EX WOOD BOLLARD
- EX CONIFEROUS TREE
- EX DECIDUOUS TREE
- PROP. EDGE OF ASPHALT
- PROP. EDGE OF CONCRETE
- 576 EX. CONTOUR
- 584 PROP. CONTOUR

## Landscape Legend

- IRRIGATED TURF
- NO-MOW GRASS


GoslingCzubak
engineering sciences, inc.
1280 Business Park Dr.
Traverse City, Michigan
231-946-9191 phone
info@goslingczubak.com
www.goslingczubak.com


CIVIL ENGINEERING
SURVEYING
ENVIRONMENTAL SERVICES
GEOTECHNICAL
CONSTRUCTION SERVICES
DRILLING
LANDSCAPE ARCHITECTURE

| No. | Date | Revision | By |
|---|---|---|---|

# LANDSCAPE & IRRIGATION PLAN - AREA 03
# JOINING JORDAN - PROJECT #MSC 218022-CPF
EAST JORDAN DDA

| | |
|---|---|
| Date Issued: | 12/23/2019 |
| Date Surveyed: | 09/09/2019 |
| Designed By: | KDH |
| Drawn By: | DAW |
| Checked By: | KSK |
| Scale: | AS NOTED |

Original sheet size is 22x34

Location:
SECTION 23
T32N R07W
CHARLEVOIX COUNTY
MICHIGAN
---

Project Number:
2019510004.03

Sheet:
**L3**

P:\2019\19004.00\cadd-data\CD\2019510004-PS-Landscape.dwg Tab: L3 LANDSCAPE & IRRIGATION PLAN - AREA 03 Saved by: dawintz 1/13/2020 11:28 PM Plotted by: Dallas A. Wintz, PLA, ASLA 1/13/2020 11:41 PM

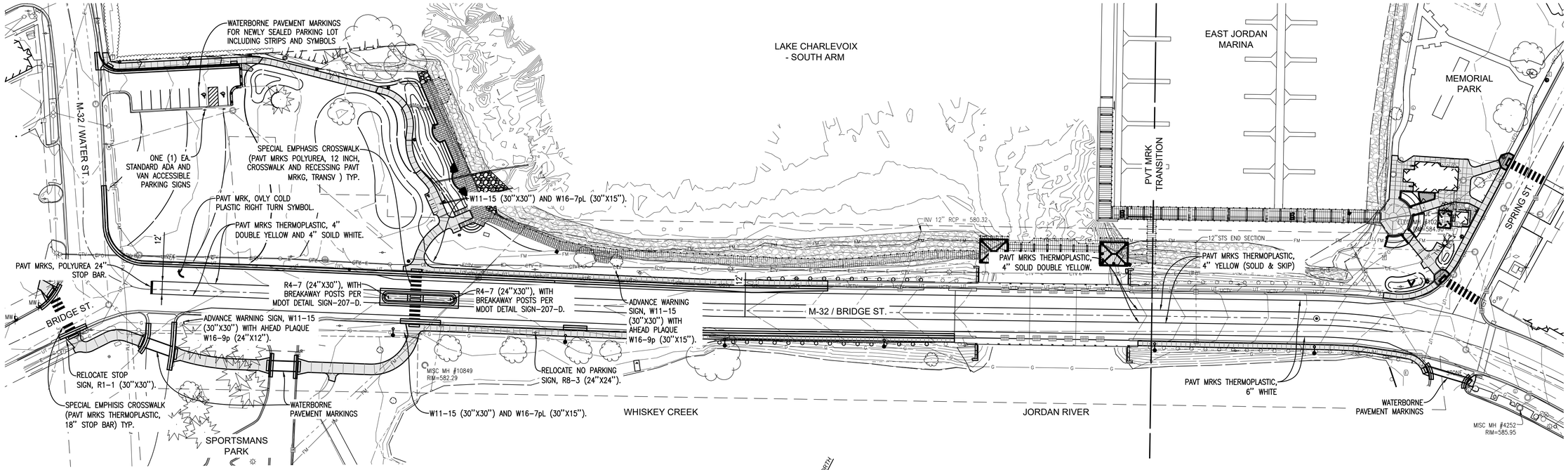


## SIGNAGE AND PAVEMENT MARKING PLAN

SCALE: 1" = 50'

NORTH

SCALE 1" = 50'

0' 50' 100'

PAVEMENT MARKINGS TO REFERENCE:

PAVE-900-F
PAVE-905-D
PAVE-930-C
PAVE-935-D
PAVE-940-C
PAVE-945-C

**SIGN TABLE**

| QUANTITY | TYPE |
|---|---|
| 4 | W11-15 (30"X30") |
| 2 | W16-9p (24"X12") |
| 2 | R4-7 (24"X30") |
| 2 | W16-7pL (30"X15") |

811 Know what's below. Call before you dig.

THE LOCATION OF THE EXISTING UTILITIES, AS SHOWN ON THIS PLAN, ARE APPROXIMATE ONLY. IT SHALL BE THE RESPONSIBILITY OF THE CONTRACTOR TO VERIFY ACTUAL LOCATION AND DEPTH OF ALL EXISTING UTILITIES. THE OWNER AND THE SURVEYOR SHALL NOT BE RESPONSIBLE FOR ANY OMISSION OR VARIATION FROM THE LOCATION SHOWN. THE CONTRACTOR SHALL NOTIFY "MISS DIG" AT 1 (800) 482-7171 OR 811 THREE (3) WORKING DAYS PRIOR TO THE START OF CONSTRUCTION.


Gosling Czubak
engineering sciences, inc.
1280 Business Park Dr.
Traverse City, Michigan
231-946-9191 phone
info@goslingczubak.com
www.goslingczubak.com


CIVIL ENGINEERING
SURVEYING
ENVIRONMENTAL SERVICES
GEOTECHNICAL
CONSTRUCTION SERVICES
DRILLING
LANDSCAPE ARCHITECTURE

| No. | Date | Revision | By |
|---|---|---|---|

# SIGNAGE AND PAVEMENT MARKING PLAN
# JOINING JORDAN - PROJECT #MSC 218022-CPF
## EAST JORDAN DDA

| | |
|---|---|
| Date Issued: | 12/23/2019 |
| Date Surveyed: | 09/09/2019 |
| Designed By: | KDH |
| Drawn By: | DAW |
| Checked By: | KSK |
| Scale: | AS NOTED |

Original sheet size is 22x34

Location:
SECTION 23
T32N R07W
CHARLEVOIX COUNTY
MICHIGAN
---

Project Number:
2019510004.03

Sheet:
**T1**

P:\2019\510004\Drawings\CADD\19510004-PS-Signage and Pavement Marking Plan.dwg Tab: T1 SIGNAGE AND PAVEMENT MARKING PLAN Saved by: daniel.a 12/23/2019 3:33 PM Plotted by: Daniel A. Witt, PLA, ASLA 1/13/2020 11:41 PM

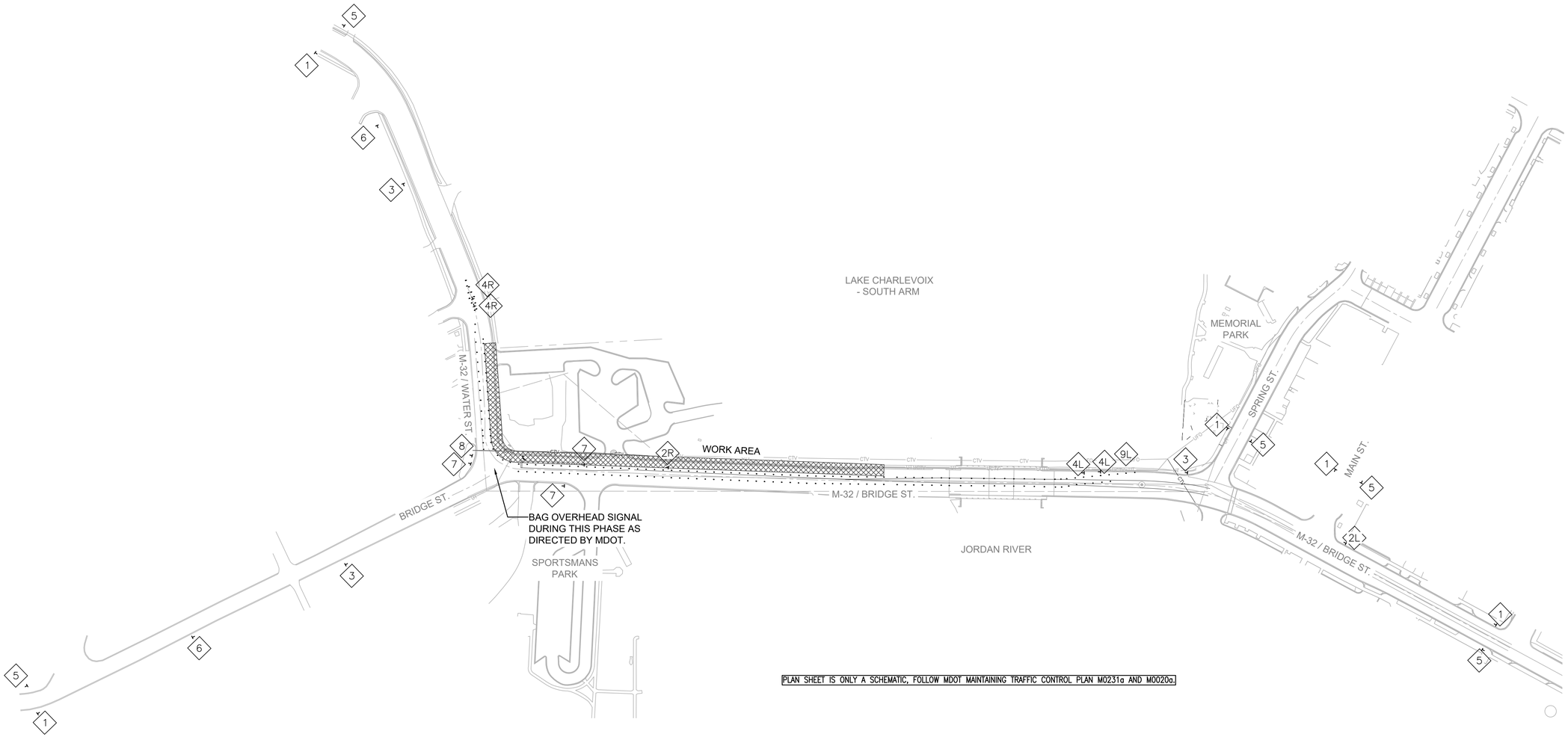


PLAN SHEET IS ONLY A SCHEMATIC, FOLLOW MDOT MAINTAINING TRAFFIC CONTROL PLAN M0231a AND M0020a.

**PHASE 01 - LANE SHIFTING SIGN PLAN**

| QUANTITY | # | TYPE |
|---|---|---|
| 5 | 1 | W20-1 "ROAD WORK AHEAD" (48"X48") |
| 1 | 2R | W1-4 (RIGHT) LANE SHIFT (48"X48") |
| 1 | 2L | W1-4 (LEFT) LANE SHIFT (48"X48") |
| 3 | 3 | R5-18c "WORK ZONE BEGINS" (48"X48") |
| 2 | 4R | W1-6 (RIGHT) ARROW (48"X24") |
| 2 | 4L | W1-6 (LEFT) ARROW (48"X24") |
| 5 | 5 | G20-2 "END ROAD WORK" (48"X48") |
| 2 | 6 | W20-5a "CENTER LANE CLOSED AHEAD" (48"X48") |
| 3 | 7 | R3-2 NO LEFT TURN SYMBOL (48"X48") |
| 1 | 8 | R3-5R RIGHT TURN ONLY SYMBOL (30"X36") |
| 1 | 9 | LIGHTED ARROW PANEL (LEFT) |

## TRAFFIC CONTROL PHASE 01

SCALE: 1" = 100'

NORTH

SCALE 1" = 100'

0' 100' 200'

811 Know what's below. Call before you dig.

THE LOCATION OF THE EXISTING UTILITIES, AS SHOWN ON THIS PLAN, ARE APPROXIMATE ONLY. IT SHALL BE THE RESPONSIBILITY OF THE CONTRACTOR TO VERIFY ACTUAL LOCATION AND DEPTH OF ALL EXISTING UTILITIES. THE OWNER AND THE SURVEYOR SHALL NOT BE RESPONSIBLE FOR ANY OMISSION OR VARIATION FROM THE LOCATION SHOWN. THE CONTRACTOR SHALL NOTIFY "MISS DIG" AT 1 (800) 482-7171 OR 811 THREE (3) WORKING DAYS PRIOR TO THE START OF CONSTRUCTION.


GoslingCzubak
engineering sciences, inc.
1280 Business Park Dr.
Traverse City, Michigan
231-946-9191 phone
info@goslingczubak.com
www.goslingczubak.com


CIVIL ENGINEERING
SURVEYING
ENVIRONMENTAL SERVICES
GEOTECHNICAL
CONSTRUCTION SERVICES
DRILLING
LANDSCAPE ARCHITECTURE

| No. | Date | Revision | By |
|---|---|---|---|

# TRAFFIC CONTROL PHASE 01
## JOINING JORDAN - PROJECT #MSC 218022-CPF
### EAST JORDAN DDA

| | |
|---|---|
| Date Issued: | 12/23/2019 |
| Date Surveyed: | 09/09/2019 |
| Designed By: | KDH |
| Drawn By: | ERP |
| Checked By: | KSK |
| Scale: | AS NOTED |

Original sheet size is 22x34

Location:
SECTION 23
T32N R07W
CHARLEVOIX COUNTY
MICHIGAN
---

Project Number:
2019510004.03

Sheet:
**T2**


I:\2019\10004 Gosling\data\CD\2019\10004-PS-Traffic Control Plan.dwg Tab: T2 TRAFFIC CONTROL PHASE 01 Saved by: dawnz 12/23/2019 3:23 PM Plotted by: Dallas A. Wirt, P.S. FSLA 1/13/2020 1:14:2 PM

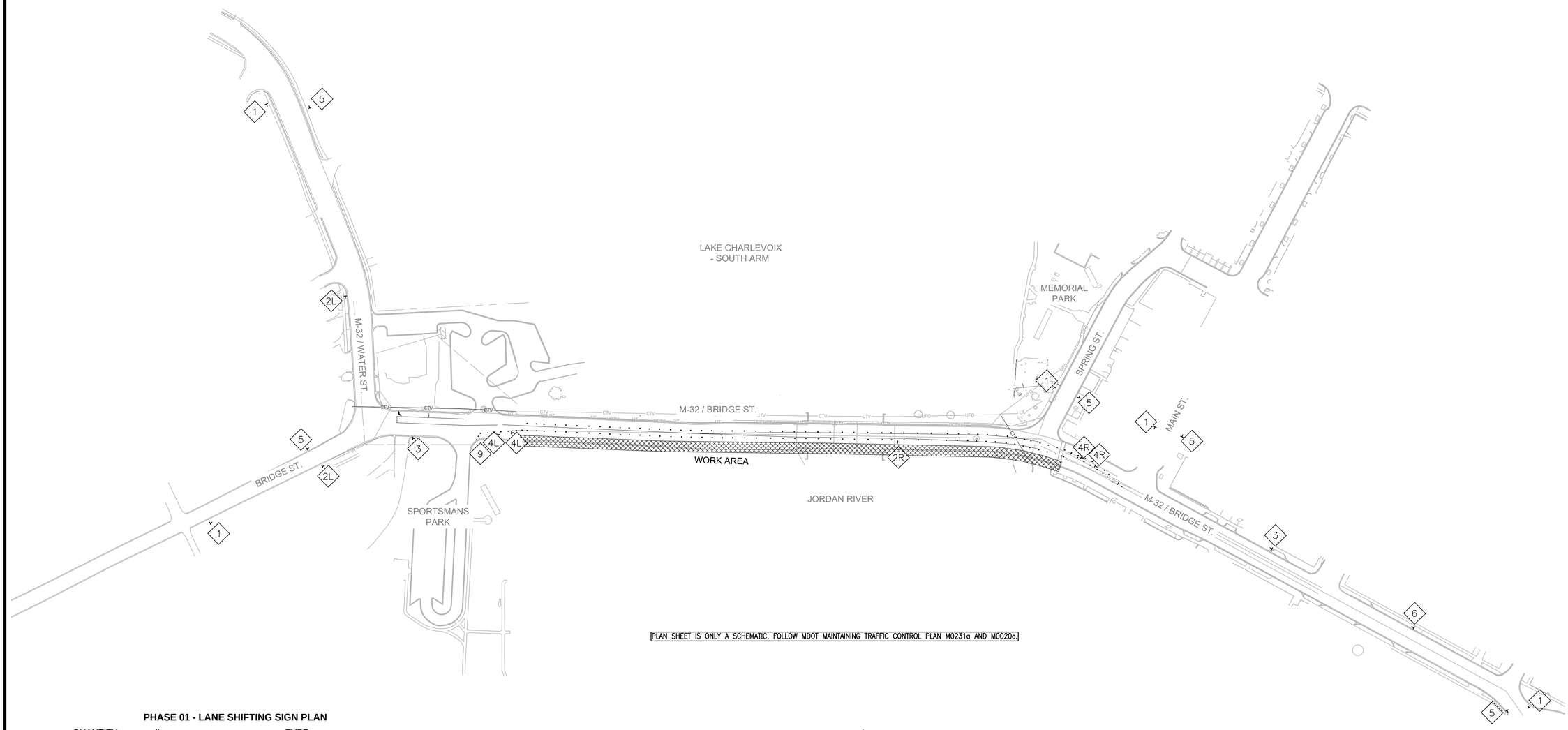


PLAN SHEET IS ONLY A SCHEMATIC, FOLLOW MDOT MAINTAINING TRAFFIC CONTROL PLAN M0231a AND M0020a.

**PHASE 01 - LANE SHIFTING SIGN PLAN**

| QUANTITY | # | TYPE |
|---|---|---|
| 5 | 1 | W20-1 "ROAD WORK AHEAD" (48"X48") |
| 1 | 2R | W1-4 (RIGHT) LANE SHIFT (48"X48") |
| 2 | 2L | W1-4 (LEFT) LANE SHIFT (48"X48") |
| 2 | 3 | R5-18c "WORK ZONE BEGINS" (48"X48") |
| 2 | 4R | W1-6 (RIGHT) ARROW (48"X24") |
| 2 | 4L | W1-6 (LEFT) ARROW (48"X24") |
| 5 | 5 | G20-2 "END ROAD WORK" (48"X48") |
| 1 | 6 | W20-5a "CENTER LANE CLOSED AHEAD" (48"X48") |
| 1 | 9 | LIGHTED ARROW PANEL (RIGHT) |

## TRAFFIC CONTROL PHASE 02

SCALE: 1" = 100'

NORTH

SCALE 1" = 100'

0' 100' 200'

811 Know what's below. Call before you dig.

THE LOCATION OF THE EXISTING UTILITIES, AS SHOWN ON THIS PLAN, ARE APPROXIMATE ONLY. IT SHALL BE THE RESPONSIBILITY OF THE CONTRACTOR TO VERIFY ACTUAL LOCATION AND DEPTH OF ALL EXISTING UTILITIES. THE OWNER AND THE SURVEYOR SHALL NOT BE RESPONSIBLE FOR ANY OMISSION OR VARIATION FROM THE LOCATION SHOWN. THE CONTRACTOR SHALL NOTIFY "MISS DIG" AT 1 (800) 482-7171 OR 811 THREE (3) WORKING DAYS PRIOR TO THE START OF CONSTRUCTION.


GoslingCzubak
engineering sciences, inc.
1280 Business Park Dr.
Traverse City, Michigan
231-946-9191 phone
info@goslingczubak.com
www.goslingczubak.com


CIVIL ENGINEERING
SURVEYING
ENVIRONMENTAL SERVICES
GEOTECHNICAL
CONSTRUCTION SERVICES
DRILLING
LANDSCAPE ARCHITECTURE

| No. | Date | Revision | By |
|---|---|---|---|

# TRAFFIC CONTROL PHASE 02
# JOINING JORDAN - PROJECT #MSC 218022-CPF
## EAST JORDAN DDA

| | |
|---|---|
| Date Issued: | 12/23/2019 |
| Date Surveyed: | 09/09/2019 |
| Designed By: | KDH |
| Drawn By: | ERP |
| Checked By: | KSK |
| Scale: | AS NOTED |

Original sheet size is 22x34

Location:
SECTION 23
T32N R07W
CHARLEVOIX COUNTY
MICHIGAN
---

Project Number:
2019510004.03

Sheet:
**T3**

I:\2019\510004.00\acad-files\CD\2019510004.03-Traffic Control Plan.dwg, Tab: T3 TRAFFIC CONTROL PHASE 02, Saved by: dawnz, 12/23/2019 3:23 PM, Plotted by: Dallas A Witz, PLA, ASLA 1/13/2020 11:42 PM

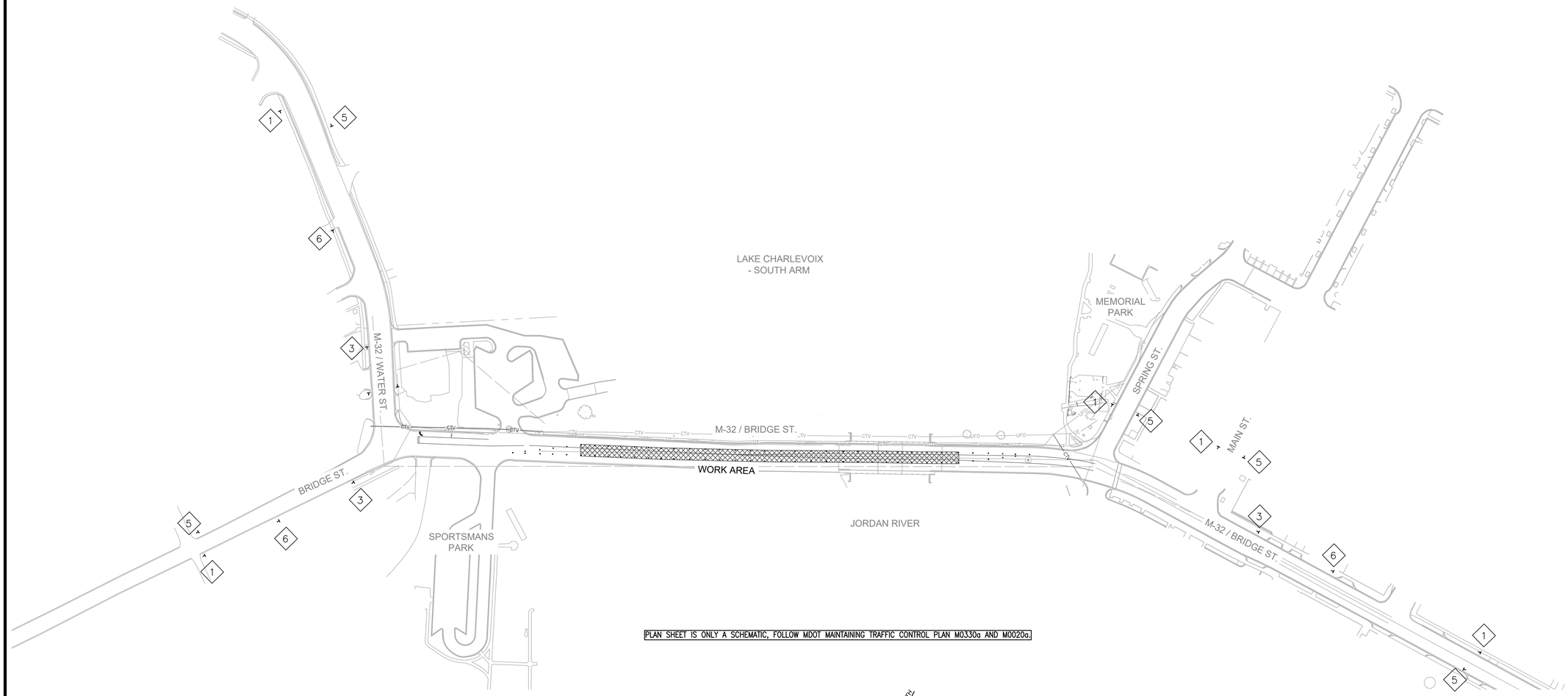


PLAN SHEET IS ONLY A SCHEMATIC, FOLLOW MDOT MAINTAINING TRAFFIC CONTROL PLAN M0330a AND M0020a.

## TRAFFIC CONTROL PHASE 03

SCALE: 1" = 100'

NORTH

SCALE 1" = 100'

0' 100' 200'

### PHASE 03 - LANE SHIFTING SIGN PLAN

| QUANTITY | # | TYPE |
|---|---|---|
| 5 | 1 | W20-1 "ROAD WORK AHEAD" (48"X48") |
| 3 | 3 | R5-18c "WORK ZONE BEGINS" (48"X48") |
| 5 | 5 | G20-2 "END ROAD WORK" (48"X24") |
| 3 | 6 | W20-5a "CENTER LANE CLOSED AHEAD" (48"X48") |

811 Know what's below. Call before you dig.

THE LOCATION OF THE EXISTING UTILITIES, AS SHOWN ON THIS PLAN, ARE APPROXIMATE ONLY. IT SHALL BE THE RESPONSIBILITY OF THE CONTRACTOR TO VERIFY ACTUAL LOCATION AND DEPTH OF ALL EXISTING UTILITIES. THE OWNER AND THE SURVEYOR SHALL NOT BE RESPONSIBLE FOR ANY OMISSION OR VARIATION FROM THE LOCATION SHOWN. THE CONTRACTOR SHALL NOTIFY "MISS DIG" AT 1 (800) 482-7171 OR 811 THREE (3) WORKING DAYS PRIOR TO THE START OF CONSTRUCTION.


GoslingCzubak
engineering sciences, inc.
1280 Business Park Dr.
Traverse City, Michigan
231-946-9191 phone
info@goslingczubak.com
www.goslingczubak.com


CIVIL ENGINEERING
SURVEYING
ENVIRONMENTAL SERVICES
GEOTECHNICAL
CONSTRUCTION SERVICES
DRILLING
LANDSCAPE ARCHITECTURE

| No. | Date | Revision | By |
|---|---|---|---|

# TRAFFIC CONTROL PHASE 03
# JOINING JORDAN - PROJECT #MSC 218022-CPF
## EAST JORDAN DDA

| | |
|---|---|
| Date Issued: | 12/23/2019 |
| Date Surveyed: | 09/09/2019 |
| Designed By: | KDH |
| Drawn By: | ERP |
| Checked By: | KSK |
| Scale: | AS NOTED |

Original sheet size is 22x34

Location:
SECTION 23
T32N R07W
CHARLEVOIX COUNTY
MICHIGAN
---

Project Number:
2019510004.03

Sheet:
**T4**

I:\2019\510004.00\cad-data\CD\2019510004.03-Traffic Control Plan.dwg, Tab: 14 TRAFFIC CONTROL PHASE 03 Saved by: dawnz, 12/23/2019 3:23 PM Plotted by: Dallas A Wirtz, PLA, ASLA 1/13/2020 11:42 PM